Kawasaki
Powering your potential

Precision Machinery Company

4-Speed Radial Piston Staffa Motor

HPC400

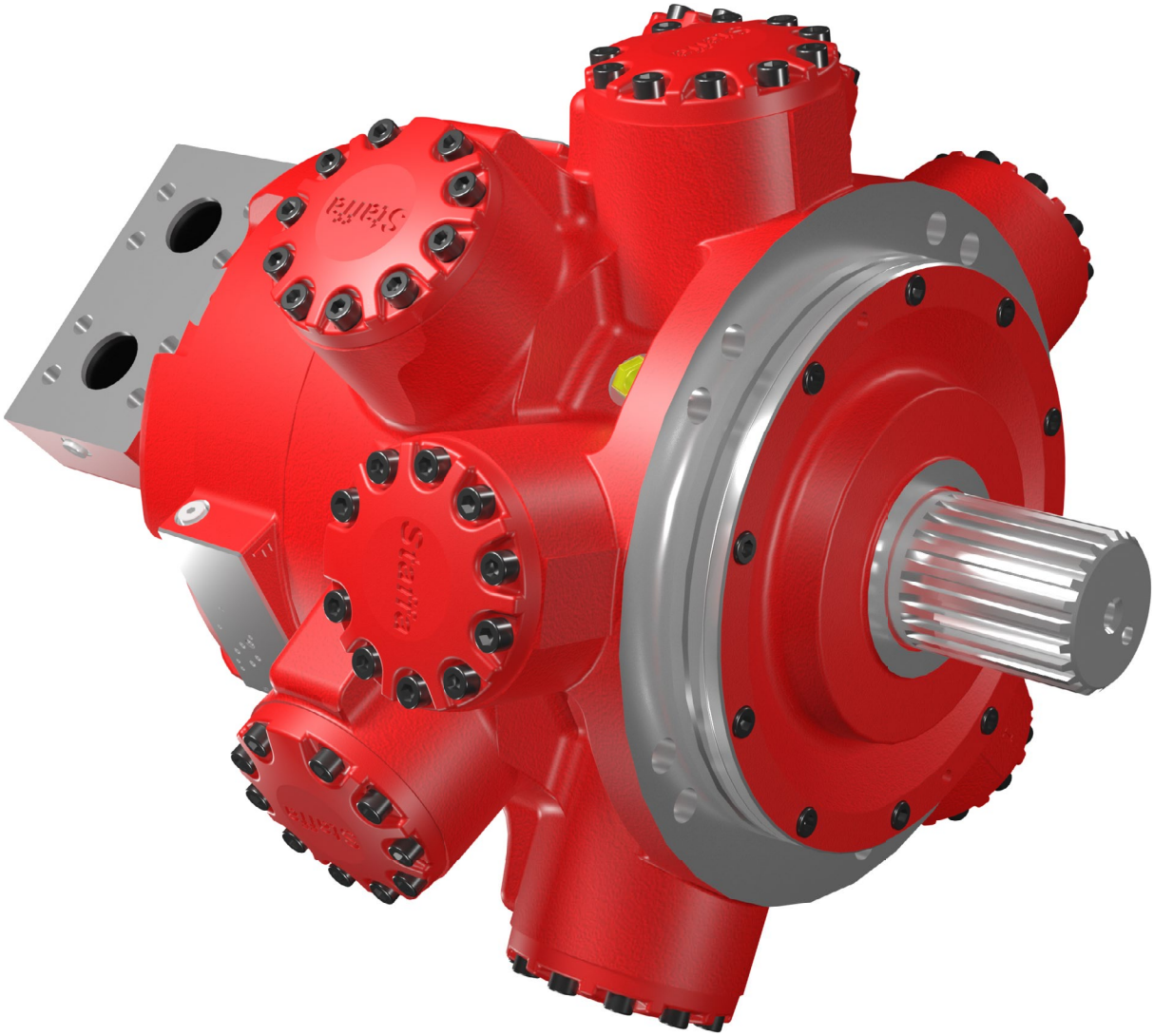

Staffa

Contents

Specifications and Features	**4**
i: Applications/Product Usage	4
ii: Safety Precautions	5
iii: Handling Precautions	6
iv: Conversion Factors, Formula & Definition	7
01 Ordering Code	**8**
1-1 Model Coding	10
02 Technical Information	**12**
2-1 Performance Data	12
2-2 Special Features	14
2-3 Volumetric Efficiency Data	18
2-4 Functional Symbols	18
2-5 Circuit and Application Notes	19
2-6 Shaft Stress Limits	22
2-7 Motor Operation at Low Temperature	23
2-8 Crankcase Flushing Data	24
2-9 Crankcase Drain Connections	25
03 Dimensions	**26**
3-1 Installation	26

5 YEAR 10,000 HOURS WARRANTY

4-Speed Radial Piston Staffa Motor

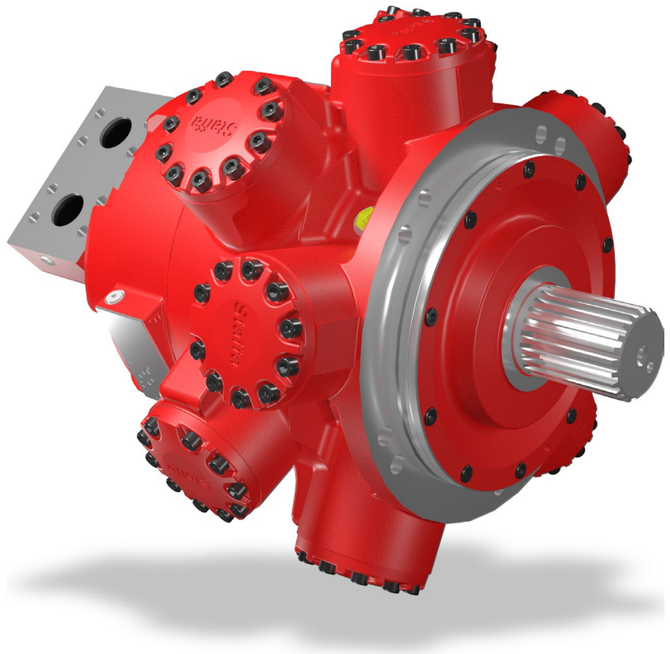

General Descriptions

Kawasaki Staffa high torque, low speed radial piston motors use hydrostatic balancing techniques to achieve high efficiency combined with good starting torque (breakout torque) and smooth running capability.

The HPC400 motor is designed to meet the needs of modern equipment manufacturers in the 21st century.

The HPC400 motor has two eccentric banks which can be independently moved between high and low displacement positions via dual CETOP 3 interfaces.

As part of the Staffa HPC range of motors, the HPC400 boasts a peak shaft power rating of 430 kW and a rated torque of 25,000 Nm. It also features the same high starting efficiencies, back pressure capabilities and dynamic displacement change of the HPC range.

Features

- **Max. Continuous Power of 430 kW**
- **Smooth Operation at Low Speed**
- **Dynamic Displacement Change**
- **Rated Torque of 25,000 Nm**
- **Freewheel Option Available**
- **Rugged Staffa Design**
- **High Starting Torque**
- **250 bar Continuous Rating**

i: Applications/Product Usage

The following must be taken into consideration before use.

1. The operating condition of the products shown in this catalogue varies depending upon each application. Therefore the product suitability must be judged by the designer of the hydraulic system and/or the person who finalises the technical specifications of the machine after analysis and testing. The product specification shall be determined based on the latest catalogue and technical documents. The system must be designed taking into account the possibility of machine failure to ensure that all safety, warning and application requirements are met.

2. For the proper use of the products, descriptions given in the SAFETY PRECAUTIONS must be observed.

3. The technical information in this catalogue represents typical characteristics and performance of the product as of the published date.

4. If the intended use of the product is included in the following, please consult with Kawasaki Precision Machinery U.K (KPM UK) in advance:

   (1). Use the product in the operating conditions or environments other than those described in the technical documents.
   (2). Use the product in the nuclear sector, aviation sector. medical sector, and/or food sector.
   (3). Use the product in applications which may cause substantial harm to others and their property, and especially in applications where ensuring safety is a requirement.

5. The information described in the catalogue is subject to change without notice. For the latest information, please contact KPM UK.

ii: Safety Precautions

Before using the product, you MUST read this catalogue and MUST fully understand how to use the product. To use the product safely, you MUST carefully read all Warnings and Cautions in this catalogue.

1. Cautions related to operation

CAUTION
- Use the personal protective equipment to prevent injury when the product is in operation.

CAUTION
- Some components are heavy. Handle the product carefully not to hurt your hands and lower back.

CAUTION
- Do not step on, hit or drop , or apply strong force to the product, as these actions may cause operation failure, product damage, or oil leakage.

CAUTION
- Wipe off any oil on the product or the floor completely, as oil can create slippery conditions that may cause drop of the product and personal injury.

2. Warnings and cautions related to installation and removal of the product

CAUTION
- Installation, removal, piping, and wiring must be done by a qualified technician.

CAUTION
- Make sure that the hydraulic power unit is turned off and that the electric motor or engine has completely stopped before starting installation or removal. You must also check that the system pressure has dropped to zero.

CAUTION
- Make sure that the power source is turned off before installing electric components to reduce the risk of electric shock.

CAUTION
- Clean the threads and the mounting surface to prevent damage or oil leakage. Inadequate cleaning may cause insufficient torque and broken seals.

CAUTION
- Use the designated bolts and fasten them with prescribed torque when installing the product. Use of undesignated bolts, and excessive or insufficient tightening torque may induce operation failure, damage, or oil leakage.

3. Warnings and cautions for operation

CAUTION
- Always equip the product with explosion or ignition protection if it is used in potentially explosive or combustible atmospheres.

CAUTION
- Shield rotary parts, such as the motor and pump shaft, to avoid injury.

CAUTION
- Stop operation immediately, and take proper measures when the abnormality such as unusual noise, oil leakage, and smoke is found. Continuing operation under such condition may bring about damage, a fire hazard, or injury.

CAUTION
- Make sure that all pipes, hoses, and connecting points with pipes or hoses, are correctly connected and tightened before starting operation.

CAUTION
- Use the product under the operating conditions and limitations described in the catalogue, drawings, and specification sheets.

CAUTION
- Do not touch the product in operation, to reduce the risk of skin burn.

CAUTION
- Use the proper hydraulic oil and maintain the filtration at the recommended level to prevent premature wear and damage.

4. Cautions related to maintenance

CAUTION
- Never modify the product without approval from KPM UK.

CAUTION
- Disassembly of the product may void the warranty.

CAUTION
- Keep the product clean and dry when storing or transporting.

CAUTION
- The seals may need to be replaced if the product has been stored for an extended period of time.

CAUTION
- Making adjustments of this product will result in the warranty being null and void.

Back to Contents Page

iii: Handling Precautions

1. Filtration and Contamination Control

1) Filtration of Working Oil
The most important means to prevent premature damage to the motor and associated equipment and to extend its working life, is to ensure that hydraulic fluid contamination control of the system is working effectively.

This begins by ensuring that at the time of installation that all piping, tanks etc. are rigorously cleaned in a sanitary way. Flushing should be provided using an offline filtration system and after flushing the filter elements should be replaced.

2) Suggested Acceptable Contamination Level
The relationship between contamination level and motor life is very difficult to predict as it depends on the type and the nature of the contamination present in the system. Sand and silica in particular, due to its abrasive nature, does significantly reduce the expected life of a motor. Based on the preconditions that there is no presence of silica type substances then a full flow (open circuit), or a full boost flow (closed circuit) is to ensure a system cleanliness to ISO 4406 code -/18/14 or cleaner.

If a full flow filtration is to be utilised, an inline filter of 10 microns nominal should be utilized to prevent contamination ingress from the external environment, a 5 – 10 micron filter with the tank's breather is also recommended.

2. Oil Filling and Air Bleeding

1) Motor Case Filling
Be sure to fill the motor casing with oil through the drain port, filling only the main connection lines with oil is totally insufficient. The motor contains bearings and high-speed sliding parts including pistons and connecting rods with joints that need to be continuously lubricated. Part seizure or total premature failure will occur very quickly if this procedure is not rigidly followed.

2) Air Bleeding
Run the motor unloaded for a period to ensure that all residual air within the system is released.

3) Long Term Out of Usage
It is undesirable to leave the motor out of use for a long period e.g. a year or more. In such a situation it is recommended that the motor is run for a short period on a more frequent basis even if it is just unloaded.

With regard to a motor held in storage then rotating the shaft on a frequent basis is sufficient. If the motor is left out for more than the suggested time it will require a service inspection.

3. Drive Shaft Coupling
Where the motor is solidly coupled to a shaft having independent bearings, the shaft must be aligned to within 0.13mm TIR.

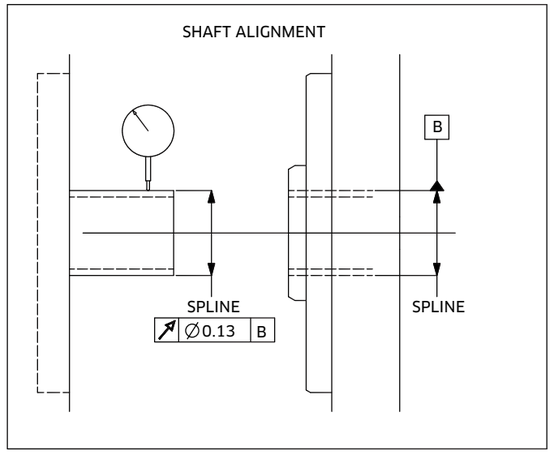

iv: Conversion Factors, Formula & Definition

Conversion Table

Pressure	
bar	PSI
1	14.5
Flow	
L/min	Gal/min
1	0.264 US
1	0.219 UK
Length	
mm	inch
25.4	1
Torque	
Nm	lbf ft
1	0.737
Mass	
kg	lb
1	2.2
Viscosity	
Centistokes (cSt)	Saybolt Universal Viscosity (SUS)
1	4.632 (@ 38°C)

Definitions

W	Shaft Power (watts)
T	Torque (Nm)
P	Pressure (bar)
ΔP	Differential Pressure (bar)
n	Speed (rpm)
V	Motor Displacement (cc/rev)
Disp.	Motor Displacement (L/rev)
C	Crankcase Pressure (bar)
K#	Constant
Q_t	Total Leakage (L/min)
cSt	Kinematic Viscosity (centistokes)

Back to Contents Page

Kawasaki
Powering your potential

01 | Ordering Code

Model Code **HPC400 / S5 / 200 / 05 / 200 / 05 / SFM45 / C / 10 / P*****

1. Staffa Series Motor
HPC400 Series, 4-speed Radial Piston Motor

2. Shaft Type

		Availability
S5	Spline 23T to BS3550	●
Z5	Spline to DIN5480 - W100 x 4 x 24 x 7h	●
P2	Parallel Key 100mm - Shaft Diameter	●

3. Displacements

Displacement Code		Front High		
		200	195	160
Front Low	80	●	●	●
	70	●	●	●
	60	●	●	●
	40	●	●	●
	20	●	●	●
	05	●	●	●
	00	⊠	●	●

Displacement Code		Rear High			
		200	195	160	130
Rear Low	80	●	●	●	●
	70	●	●	●	●
	60	●	●	●	●
	30	●	●	●	●
	20	●	●	●	●
	05	●	●	●	●
	00	⊠	●	●	●

Many other displacements are available - please contact KPM UK if your requirement is not listed.

4. Valve Housing
For Inlet/Outlet connections

		Availability
SFM45	Ø 2" SAE Code 62 - 4-bolt Flange	●
SC45	Ø 38mm Port - 6-bolt Manifold	❍

5. C Spacer

		Availability
C	2 x CETOP 3, for mounting a valve, to change displacement	●

6. Current Design Series
This number changes if there are design improvements which affect interchangeability of parts.

7. Special Features
For features not present in our standard catalogue motor e.g. High Pressure Shaft Seal, Stainless Steel Shaft Sleeve (See section 2-2)

Availability Key	
●	Preferred
●	Available
❍	Optional
⊠	Not Available

Back to Contents Page

1-1 Model Coding

Special Features Suffix

/ P * * * * *

Shaft Seal Enhancements

A	High Pressure Shaft Seal
B	Improved Shaft Seal Life
C	High Pressure Shaft Seal & Improved Shaft Seal Life
O	None

See Section 2-2 for details

External Protection

B	Marine-Specification Primer Paint (HP20)
D	Unpainted
E	Marine Specification Cylinder Heads
F	Marine Specification Cylinder Heads + Marine Specification Paint (HP20)
G	Marine Specification Cylinder Heads + 2-pack Epoxy Grey Paint
O	None

See Section 2-2 for details

Installation Features

A	Drain port adaptor x 1
B	Drain port adaptor x 2
O	None

See Section 2-2 for details

Valve Enhancements

A	Improved Cavitation Resistance
O	None

See Section 2-2 for details

Performance Enhancements

O	None

See Section 2-2 for details

Additional Displacement Options

Displacement Code		Front High					
		200	195	170	160	130	110
Front Low	80	●	●	●	●	●	❍
	70	●	●	●	●	●	❍
	60	●	●	●	●	●	❍
	40	●	●	●	●	●	❍
	35	❍	❍	❍	❍	❍	❍
	30	❍	❍	❍	❍	❍	❍
	20	●	●	●	●	●	❍
	15	❍	❍	❍	❍	❍	❍
	10	❍	❍	❍	❍	❍	❍
	05	●	●	●	●	●	❍
	00	⊠	●	●	●	●	❍

Displacement Code		Rear High					
		200	195	170	160	130	110
Rear Low	80	●	●	❍	●	●	❍
	70	●	●	❍	●	●	❍
	60	●	●	❍	●	●	❍
	40	❍	❍	❍	❍	❍	❍
	35	❍	❍	❍	❍	❍	❍
	30	●	●	❍	●	●	❍
	20	●	●	❍	●	●	❍
	15	❍	❍	❍	❍	❍	❍
	10	❍	❍	❍	❍	❍	❍
	05	●	●	❍	●	●	❍
	00	⊠	●	❍	●	●	❍

Availability Key	
●	Preferred
●	Available
❍	Optional
⊠	Not Available

Back to Contents Page

Kawasaki
Powering your potential

2-1 Performance Data

Performance data is valid for the HPC400 motors when fully run-in and operating with mineral oil.

The appropriate motor displacements can be selected using performance data shown in section 1-1.

If fluid to be used is not mineral oil, please contact KPM UK.

Rating Definitions

Continuous rating
The motor must be operated within each of the maximum values for speed, pressure and power.

Intermittent rating
Intermittent max pressure: 300 bar.

This pressure is allowable on the following basis:

a) Up to 50 rpm 15% duty for periods up to 5 minutes maximum.

b) Over 50 rpm 2% duty for periods up to 30 seconds maximum.

Static pressure to DNV rules 405 bar.

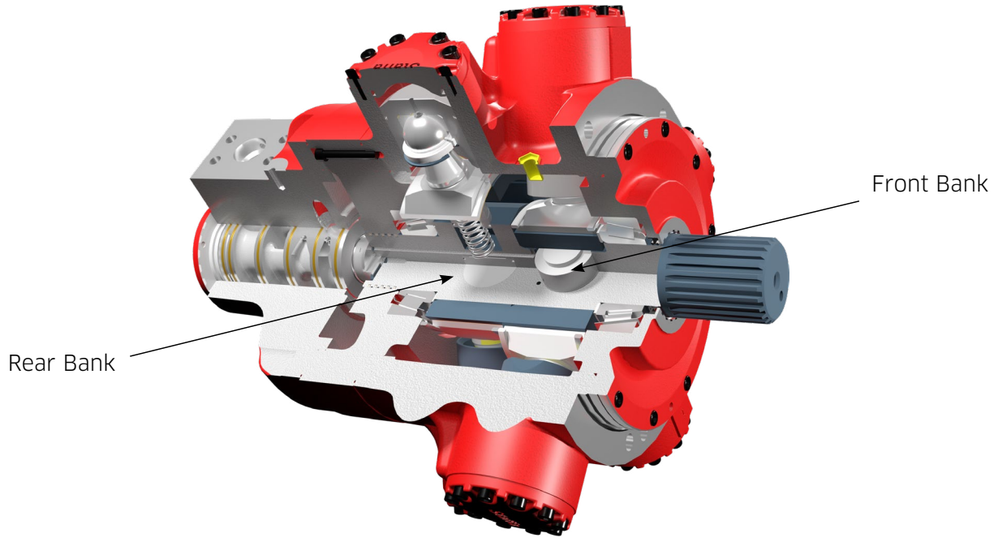

Notes
The HPC400 motor has two banks of cylinders referred to as 'front bank' and 'rear bank'.
The HPC400 motor may be specified with a freewheel displacement on one or both of the front and rear banks. When the motor is in 'motoring' mode, one bank may be put into the freewheel displacement without restricting the motor's rated pressure.

Total Displacement Cu. In.	400	390	270	210	205	195	140	130	80	75	20	10	00
Total Displacement – cc/rev	6,555	6,391	4,425	3,441	3,590	3,195	2,294	2,130	1,311	1,229	328	164	0
Displacement (Front Bank) - cc/rev	3,277	3,195	3,277	3,277	3,277	3,195	1,147	1,147	1,147	1,147	164	82	0
Displacement (Rear Bank) - cc/rev	3,277	3,195	1,147	164	82	0	1,147	983	164	82	164	82	0
Average Actual Running Torque - Nm/bar	100.0	97.4	66.1	51.3	50.1	47.6	34.1	31.4	19.6	18.1	3.6	0	0
Average Actual Starting Mechanical Efficiency - %	96.5	95.8	93.9	93.7	93.7	93.6	93.4	92.6	93.9	92.5	69.0	0	0
Average Actual Starting Torque - Nm/bar	91.6	89.3	60.0	44.0	42.7	40.1	26.9	23.5	11.4	10.2	/	/	/
Average Actual Start Efficiency - %	87.8	87.8	85.2	80.3	79.9	78.8	73.7	69.3	54.6	52.1	/	/	/
Max Continuous Speed - rpm	220	220	220	220	220	250	460	460	460	460	630	1,500	1,500
Max Continuous Power - kW	430	430	315	265	260	250	245	230	105	95	20	10	0
Max Continuous Pressure - bar	250	250	250	250	250	250	250	250	250	250	250	20	20
Max Intermittent Pressure - bar	300	300	300	300	300	300	300	300	300	300	300	20	20

Further performance data, including alternative displacement combinations, is available upon request from KPM UK.

Back to Contents Page

Kawasaki
Powering your potential

2-2 Special Features

High Pressure Shaft Seal

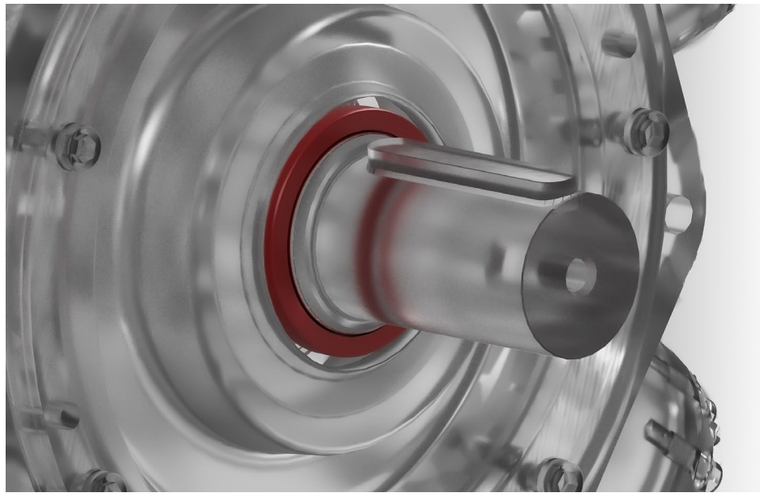

Description:

> 10 bar rated
> Recommended for cold climates
> Rugged construction

Technical Information

Where crankcase pressure will be higher than 3.5 bar, the high pressure shaft seal should be selected.

Case pressure:	< 10 bar
Non-operating temperature limits:	Below -30°C and above 120°C
Minimum operating temperature:	-15°C
Maximum operating temperature:	80°C
Minimum viscosity:	2,000cSt
Maximum viscosity:	150cSt

Improved Shaft Seal Life

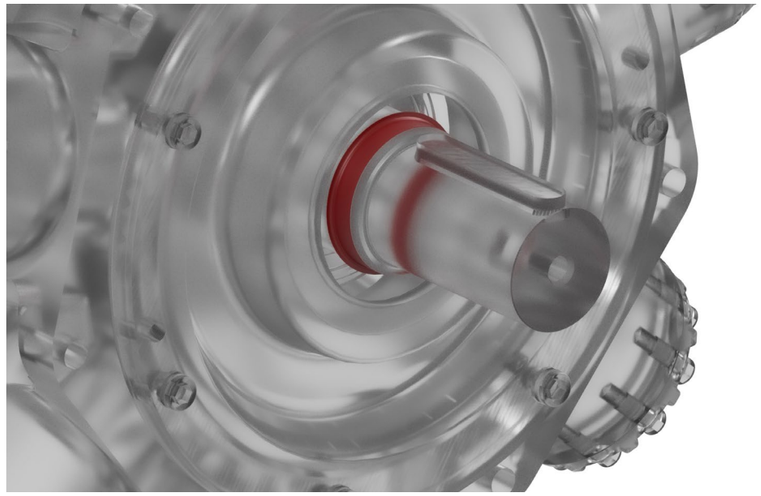

Description:

> Stainless steel sleeve prevents corrosion
> Improved wear resistance
> Recommended for corrosive environments

Technical Information

A well-established method of increasing rotary seal life in corrosive environments is to fit a thin-walled, stainless steel sleeve to the rotating shaft to provide a corrosion-resistant, wear-resistant counterface surface for the seal to run against. All HPC400 motors can be fitted with such sleeves upon request.

Sleeve material:	A304 Stainless Steel
Sleeve surface finish:	Ra 0.25 to 0.5µm (10 to 20µin)

Marine Specification Primer Paint

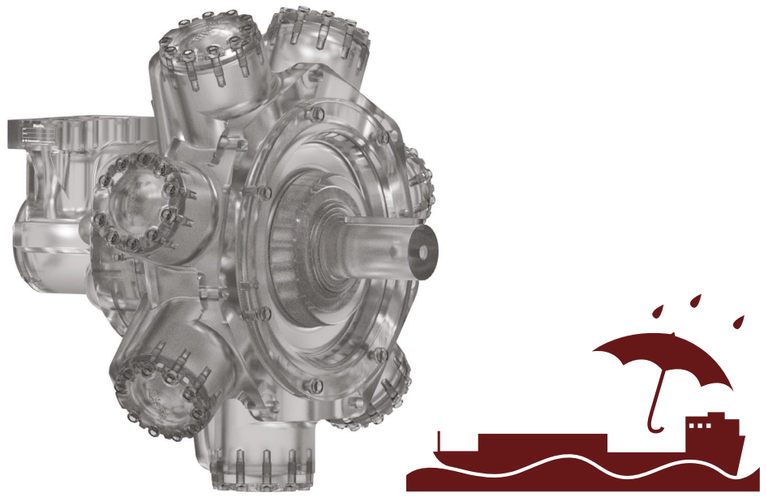

Description:

> Improves corrosion and water resistance of the finishing system
> Excellent adhesion strength
> Recommended for marine applications

Technical Information

Option 1

Colour:	Red oxide marine specification primer paint (HP20)
Type:	Single pack epoxy etching primer
Standard:	S 3900 part A 8
Dry film thickness:	> 12µm

Option 2

Colour:	Grey
Type:	Two pack epoxy etching primer
Dry film thickness:	100 µm typical

Back to Contents Page

2-2 Special Features (Cont.)

Marine-Style Cylinder Head

Description:

> Reduces water entrapment
> Improves corrosion resistance
> Aids paint coverage

When top-coat paint solutions are applied to any surface, coverage can become sub-optimal for very complex shapes. As protection of the Staffa motor's external surfaces is critical in corrosive environments, the marine-style cylinder head – which is geometrically simplified compared to the standard design – can be specified for all HPC400 motors to aid optimal top-coat application.

Technical Information

No installation dimensions or after-market parts are affected when selecting this option as it is completely interchangeable with the standard cylinder head. Existing motors may be upgraded without requiring other replacement parts.

Drain Port Adaptor

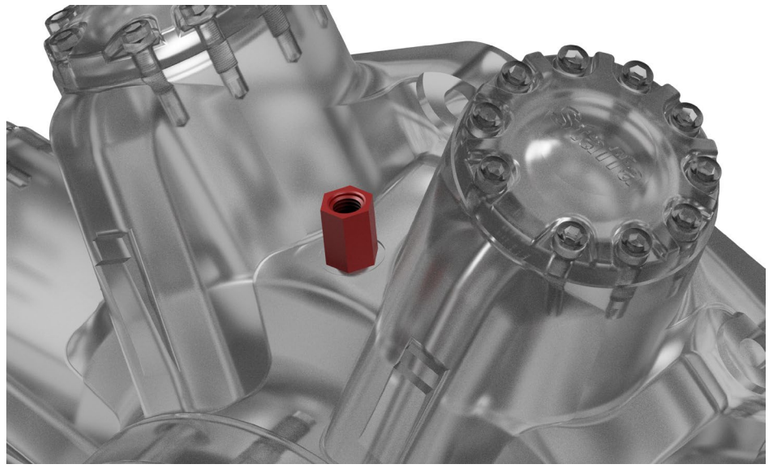

Description:

> Improves manufacturing logistics
> Motor supplied ready for connection to 1 X 1/2" BSPP male fitting

Technical Information

Motor Type	Adaptor Supplied
HPC400	¾" UNF 2B to ½" BSPP

Improved Cavitation Resistance

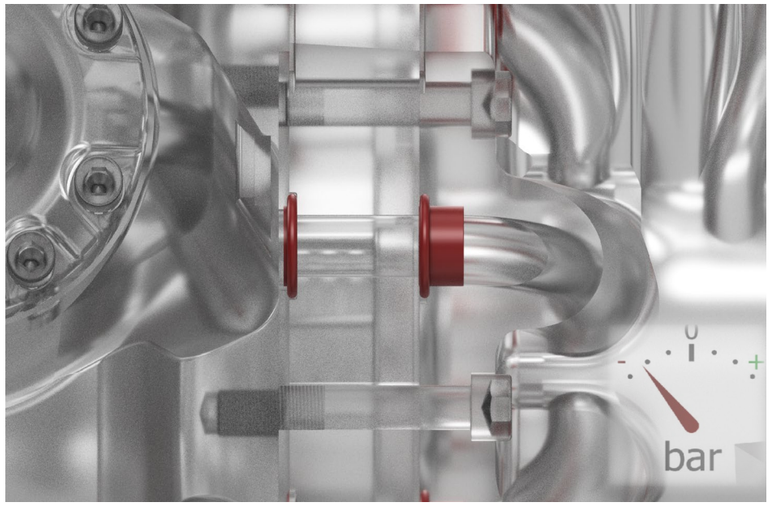

Description:

> Recommended for overrunning applications
> Protects against seal damage for short periods of operation in vacuum inlet conditions

Technical Information

Cavitation can occur due to many different factors. Although it is not possible to make the HPC400 motor completely resistant to cavitation, certain features can be added to improve the motor's resistance to short periods of lost port pressure.

In applications where the HPC400 motor can be driven (like a pump), a risk arises that insufficient fluid will be provided to maintain a positive pressure at both main ports of the motor, causing cavitation. The results of extended running at these conditions can be catastrophic to the motor's function.

The improved cavitation resistance feature should be considered where:

> Overrunning conditions may occur (load driving the motor)
> Loss of main port pressure while motor is rotating

Back to Contents Page

2-3 Volumetric Efficiency Data

Motor Type	Geometric Displace-ment	Zero Speed Constant	Speed Constant	Creep Speed Constant	Crankcase Leakage Constant
HPC	**L/rev**	**K1**	**K2**	**K3**	**K4**
HPC400	6.555	9.7	30.0	1.1	10.1

Fluid Viscosity	Viscosity Factor
cSt	**Kv**
20	1.58
25	1.44
30	1.30
40	1.10
50	1.00
60	0.88

Q_t (total leakage)	= [K1 + n/K2] x ΔP x Kv x 0.005	L/min
Creep speed	= K3 x ΔP x Kv x 0.005	rpm
Crankcase leakage	= K4 x ΔP x Kv x 0.005	L/min
ΔP	= differential pressure	bar
n	= speed	rpm

The motor volumetric efficiency can be calculated as follows:

$$\text{Volumetric efficiency (\%)} = \left[\frac{\text{(speed x disp.)}}{\text{(speed x disp.)} + Q_t}\right] \times 100$$

Example:

HPC400 motor with displacement of 6.555 L/rev.

Speed	60 rpm
Differential pressure	200 bar
Fluid viscosity	50 cSt

Total leakage = (K1+n/K2) x ΔP x Kv x 0.005

= (9.7+60/30.0) x 200 x 1 x 0.005

= 11.7 L/min

$$\textbf{Volumetric efficiency (\%)} = \left[\frac{(60 \times 6.555)}{(60 \times 6.555) + 11.7}\right] \times 100$$

= 97.1%

2-4 Functional Symbols

Example Model Code: HPC400 / **/ */ **/ ***/ **/ SFM45 / C**

C - external supply to PC ports

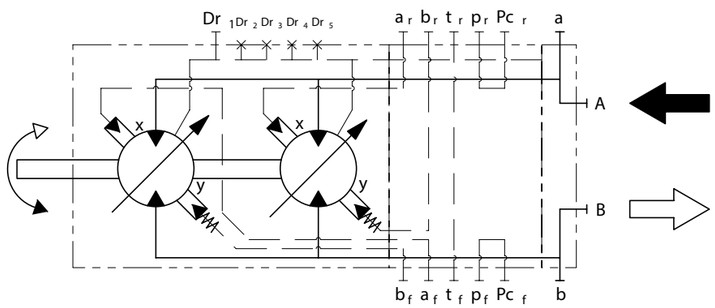

For Clockwise rotation (reverse connections for Anti-Clockwise rotation)

2-5 Circuit and Application Notes

Displacement Selection

To select either displacement, a pressure at least equal to 67% of the motor inlet/outlet pressure (whichever is higher) is required. In most applications the motor inlet pressure will be used. If the inlet/outlet pressure is below 3.5 bar, a minimum control pressure of 3.5 bar is required. In the event of loss of control pressure the motor will shift to its highest displacement.

HPC400	To change high to low in 0.5sec requires 15 L/min per bank

Small Displacements

The pressures given in the table in section 1-1 for displacement code "00" are based on 1,000 rpm output shaft speed. This pressure can be increased for shaft speeds less than 1,000 rpm; consult KPM UK for details. Speeds greater than 1,000 rpm may be applied but only after the machine duty cycle has been considered in conjunction with KPM UK. A zero swept volume displacement (for freewheeling requirements) is available on request, consult KPM UK.

Starting Torque

Refer to performance data, (see section 2-1).

Low Speed Operation

The minimum operating speed is determined by load inertia, drive elasticity, motor displacement and system internal leakage. If the application speed is below 3 rpm, then consult KPM UK. If possible, always start the motor in high displacement.

High Back Pressure

When both inlet and outlet ports are pressurised continuously, the lower pressure port must not exceed 100 bar at any time. Note that high back pressure reduces the effective torque output of the motor.

Boost Pressure

When operating as a motor the outlet pressure should equal or exceed the crankcase pressure. If pumping occurs (i.e. overrunning loads) then a positive pressure, "P", is required at the motor ports. Calculate "P" (bar) from the boost formula:

$$P = 1 + \frac{N^2 \times V^2}{K} + C$$

Motor	Porting	Constant (K)
HPC400	SFM45/SC45	101×10^9

Where P = boost pressure (bar), N = motor speed (rpm), V = motor displacement (cc/rev), C = Crankcase pressure (bar).

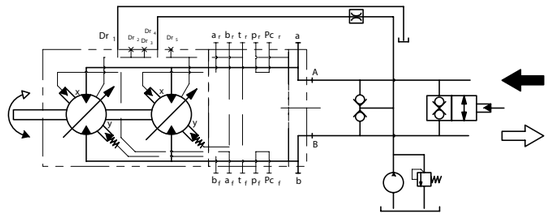

Circuit for case flushing, integrated supply, uni-directional. Contact KPM UK for this option.

Check valve pressure (bar) *	Orifice diameter (mm)
3	4.4
4	4.1
5	3.9
6	3.7
7	3.6
8	3.5
9	3.4
10	3.3

* pressure is given assuming zero case pressure.

Back to Contents Page

Kawasaki
Powering your potential

2-5 Circuit and Application Notes (Cont.)

General

Spigot
The motor should be located by the mounting spigot on a flat, robust surface using correctly sized bolts. The diametrical clearance between the motor spigot and the mounting must not exceed 0.15 mm. If the application incurs shock loading, frequent reversing or high speed running, then high tensile (grade 12.9) bolts should be used, including one fitted bolt.

HPC400 mounting flange incorporates 10 mounting holes as standard. If high tensile bolts are to be used, 5 bolts fitted at 72° intervals will be sufficient. If lower grade bolts are to be used it is recommended that 10 bolts are fitted.

Bolt torque
The recommended torque wrench setting for bolts is as follows:

M20	407 +/- 14 Nm	Values for high tensile bolts.
¾" UNF	393 +/- 14 Nm	

Bearing lubrication - piping
The installation arrangement must not allow siphoning from the motorcase. Where this arrangement is not practical, please consult KPM UK.

Any of the drain port positions can be used, but the drain line should be run above the level of the uppermost bearing and if there is risk of siphoning then a siphon breaker should be fitted.

Start - Up

Fill the crankcase with system fluid. Where practical, a short period (30 minutes) of "running in" should be carried out with the motor unloaded and set to its high displacement.

Motorcase Pressure

The motorcase pressure should not continuously exceed 3.5 bar with a standard shaft seal fitted. On installations with long drain lines a relief valve is recommended to prevent over-pressurising the seal.

Notes
1) The motorcase pressure at all times must not exceed either the motor inlet or outlet pressure.

2) High pressure shaft seals are available to special order for casing pressures of: 10 bar continuous and 15 bar intermittent.

3) Check installation dimensions (see section 2-2) for maximum crankcase drain fitting depth.

Hydraulic Fluids

Only mineral oil variant. Other fluids (see below) may require a reduction in pressure and speed limits, please contact KPM UK.

a) Antiwear hydraulic oils
b) Phosphate ester (HFD fluids)
c) Water glycols (HFC fluids)
d) 60/40% water-in-oil emulsions (HFB fluids)
e) 5/95% oil-in-water emulsions (HFA fluids)
f) Antiwear environmentally acceptable lubricants (EALs)

Viscosity limits when using any fluid except oil-in-water (5/95) emulsions, see section 2-7.

Filtration

Full flow filtration (open circuit), or full boost flow filtration (closed circuit) to ensure system cleanliness to ISO 4406 code -/18/14 or cleaner.

Noise Levels

The airborne noise level is less than 67 dBA (DIN) through the "continuous" operating envelope. Where noise is a critical factor, installation resonances can be reduced by isolating the motor by elastomeric means from the structure and the return line installation. Potential return line resonance originating from fluid borne noise can be further attenuated by providing a return line back pressure of 2 to 5 bar.

Mass

All HPC400 models approx. 594 kg.

Freewheeling Notes

All Staffa motors can be used in freewheeling applications. In all circumstances it is essential that the motor is unloaded (A and B ports connected together) and that the circuit is boosted.

The required boost pressure will be dependent on speed and displacement.

It should be noted that for motors in high displacement, large flows will re-circulate around the motor. This will require a large re-circulating valve and consideration of circuit cooling as the motor will generate a braking torque. It is for these reasons that 'C' series motors are the preferred option for freewheeling applications. It is normal to select displacement codes 10, 05 or 00.

Selecting the lowest available displacement of zero (00) will allow the motor shaft to be rotated at high speed without pumping fluid and with a minimum boost requirement. This will result in a minimum drive torque requirement for the freewheeling motor. Examples of the freewheeling feature on a winch are: dropping the load quickly in the case of an emergency and paying out cable. Consideration should be given when freewheeling such that the load does not drive the motor above its rated freewheeling speed.

The HPC400 motor may be specified with freewheel displacement on one or both of the front and rear drum positions. Choosing the freewheel option will limit maximum displacement to 390 cubic inches/rev. When the motor is in 'motoring' mode, one drum may be put into the freewheel displacement without restricting the motor's rated pressure.

Displacement Selection

If the motor inlet/outlet pressure is below 3.5 bar, then a minimum 3.5 bar control pressure is required in order to ensure that the motor remains in minimum displacement. It should be noted that in the event of loss of control pressure, the motor will shift to its highest displacement, which could result in damage to the motor. When freewheeling with displacement codes: 00, 05 or 10, it can be difficult to generate a 3.5 bar pressure. In these circumstances it is necessary to feed the displacement change control circuit from a separate source thus ensuring a minimum control pressure of 3.5 bar. Under all operating conditions the control pressure port should be at least 2/3 of the motor inlet/outlet pressure ports.

Boost Requirement

The required boost pressure is detailed in section 2-5. The actual required level will be determined by the expected maximum speed in maximum displacement during the overrunning condition. A maximum motor and control pressure of 17 bar at 1,000 rpm is stated in the bulletins, although for purposes of freewheeling it is better to maintain a minimum boost level that satisfies all motor operating conditions. **The Staffa motor bulletin boost formulae does not apply to freewheeling displacements.** High boost levels will increase motor losses at the conrod slipper interface and valve assembly, which will increase the motor operating temperature.

The boost flow required should be sufficient to makeup circuit leakage loss and provide cooling for the pressure drop of recirculating flow.

Back to Contents Page

2-6 Shaft Stress Limits

When applying large external radial loads, consideration should also be given to motor bearing lives, (see below).

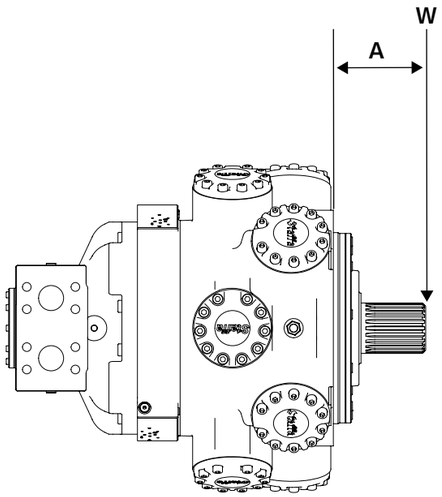

Worked example:

Determine the maximum radial shaft load of a HPC400 motor:

Radial load offset, A = 0.1 m

Maximum radial load, W **= 16,000 (see table)/0.1**

= 160,000 N =160 kN

A = Distance from mounting face to load centre (m)
W = Side load (N)

Motor type	Maximum external radial bending moment (Nm)
HPC400	16,000

Polar Moment Of Inertia

Typical data:

Motor	Displacement code	kg m²
HPC400	200/200	0.390
	100/100	0.360
	200/05	0.360
	05/05	0.340

Bearing Life Notes

Consideration should be given to the required motor bearing life in terms of bearing service life. The factors that will determine bearing life include:

1) Duty cycle - time spent on and off load
2) Speed
3) Differential pressure
4) Fluid viscosity, type, cleanliness and temperature
5) External radial shaft load
6) External axial shaft load

If detailed bearing life calculations are required, please contact KPM UK, providing all of the above information.

2-7 Motor Operation at Low Temperature

When operating the motor at low temperature consideration should be given to the fluid viscosity. The maximum fluid viscosity before the shaft should be turned is 2,000 cSt. The maximum fluid viscosity before load is applied to the motor shaft is 150 cSt.

If low ambient temperature conditions exist, then a crankcase flushing flow of at least 5 L/min should be applied to the motor during periods when the motor is not in use.

The shaft seal temperature limits for both medium and high pressure applications are shown in the table below.

	Non-operating temperature limits	Minimum operating temperature
Standard pressure shaft seal	below minus 40°C and above 100°C	minus 30°C
High pressure shaft seal	below minus 30°C and above 120°C	minus 15°C

All seals are very brittle below minus 40°C and are likely to break very easily and due to their sluggish response may not provide a 100% leak free condition.

It should be noted that the maximum continuous operating temperature within the motor crankcase is plus 80°C.

Temperature Limits

Ambient min. -30°C
Ambient max. +70°C

Max. operating temperature range.

	Mineral oil
Min	-20°C
Max. *	+80°C

Viscosity and Temperature Range

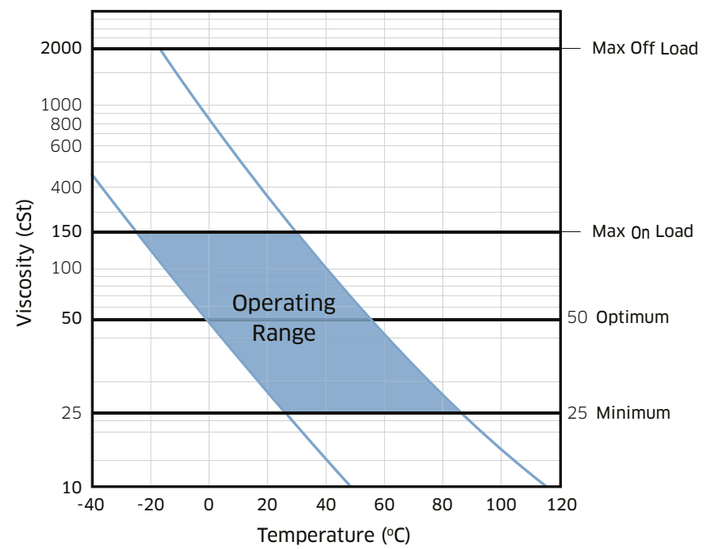

Back to Contents Page

Kawasaki
Powering your potential

2-8 Crankcase Flushing Data

General

In order to achieve the maximum shaft power, a crankcase flushing flow of 15 L/min should be directed through the motorcase. To improve the cooling effect of flushing flow, the distance between the inlet and outlet drain port connections should be maximised. If a flushing flow is not used, please consult KPM UK to verify performance parameters.
The following circuit diagrams are examples of flushing options:

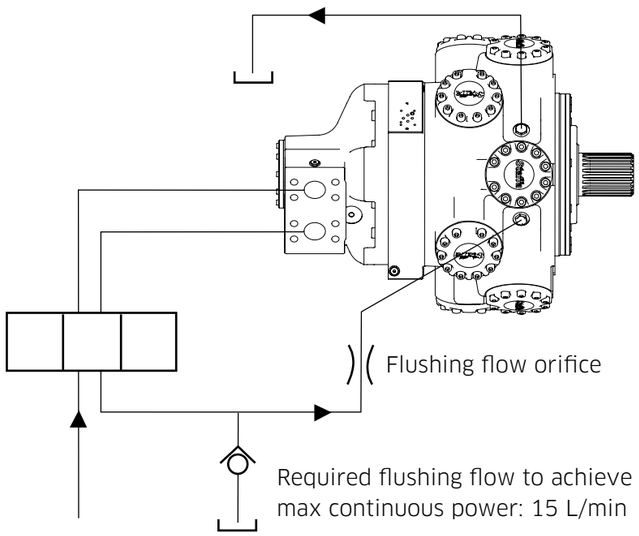

Check valve pressure (bar) *	Orifice diameter (mm)
3	4.4
4	4.1
5	3.9
6	3.7
7	3.6
8	3.5
9	3.4
10	3.3

* This assumes that the crankcase pressure is zero, if not then the check valve pressure will need to be increased to maintain the pressure drop across the orifice.

The crankcase flushing flow of 15 L/min will control and reduce the temperature rise of the motor during the freewheeling operation. This should not be necessary for motor speeds up to 1,000 rpm. If operating at speeds above 1,000 rpm, then consult KPM UK.

Circuit for case flushing, external supply, bi-directional

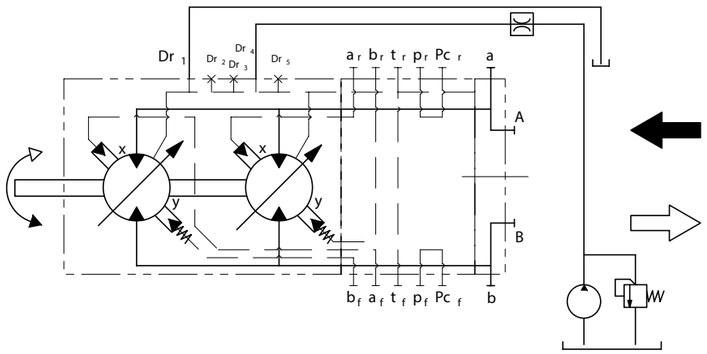

Circuit for case flushing, integrated supply, uni-directional. Contact KPM UK for this option.

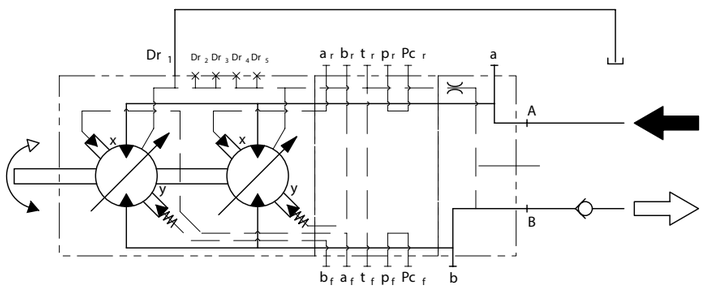

2-9 Crankcase Drain Connections

Motor axis - horizontal

The recommended minimum pipe size for drain line lengths up to approx. 5m is 12.0 mm (½") bore. Longer drain lines should have their bore size increased to keep the crankcase pressure within limits.

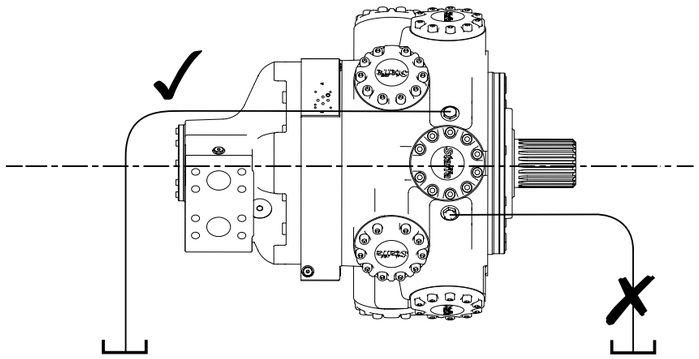

Motor axis - vertical shaft down

The piping, from any drain port, must be taken above the level of the motorcase to ensure good bearing lubrication. The arrangement must not allow syphoning from the motorcase.

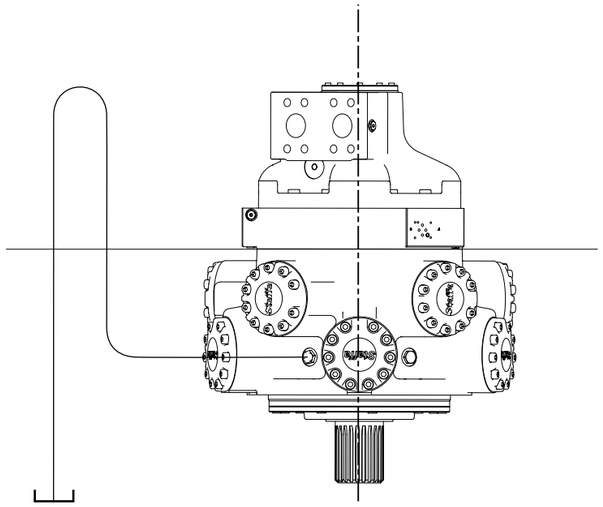

Back to Contents Page

Kawasaki
Powering your potential

3-1 Installation

Example model code - HPC400/S5/200/05/200/05/SFM45/C/10

SFM45 = Ø2" SAE code 62 4-bolt flange
SC45 = Ø38mm ports

HPC400 mounting flange incorporates 10 mounting holes as standard. If high tensile bolts (12.9) are to be used, 5 bolts fitted at 72° intervals will be sufficient. If lower grade bolts (10.9 or 8.8) are to be used it is recommended that 10 bolts are fitted.

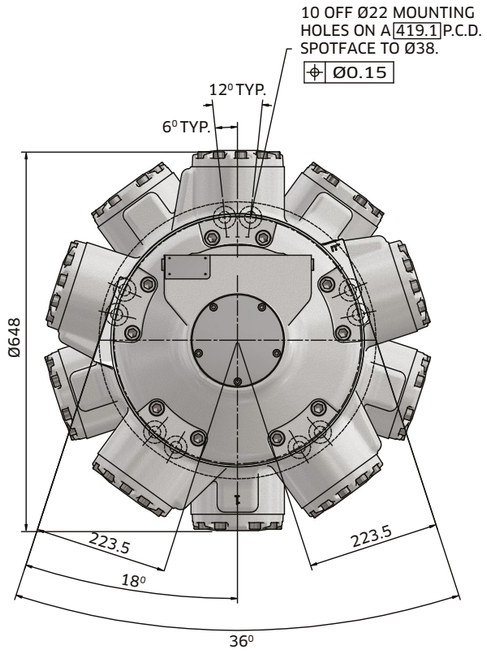

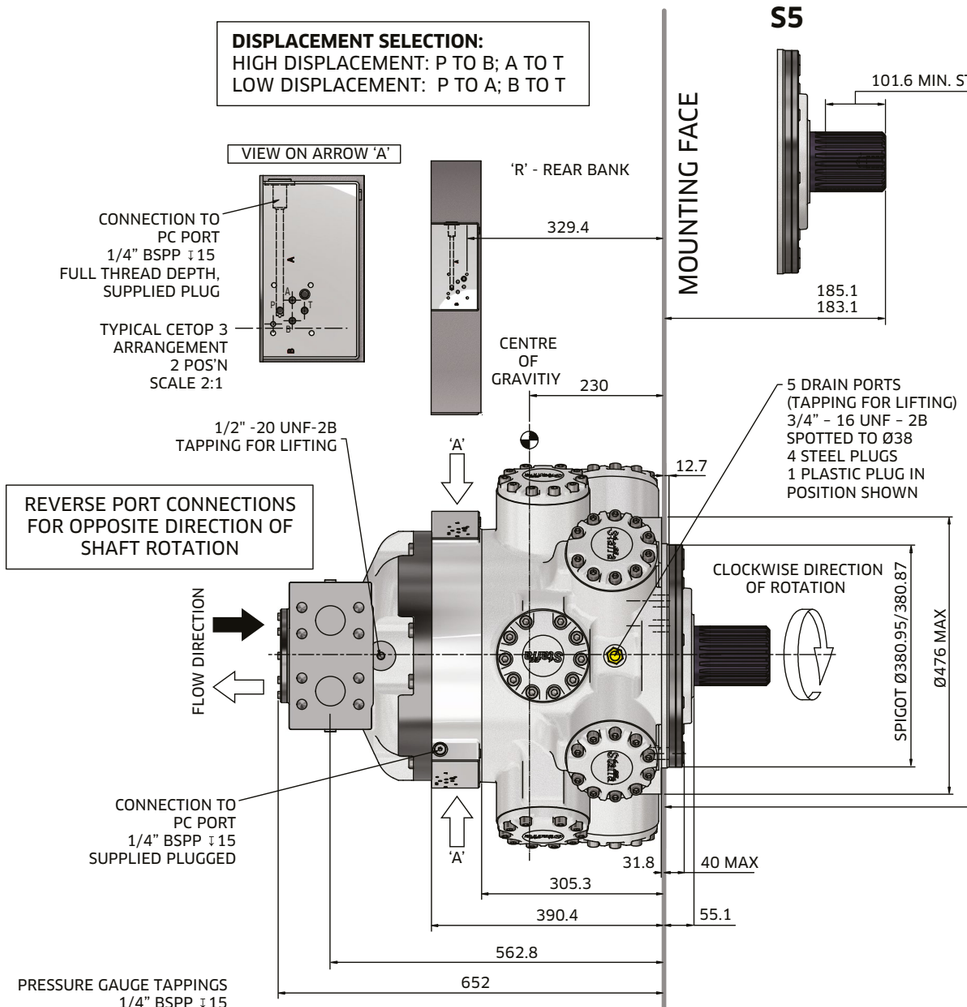

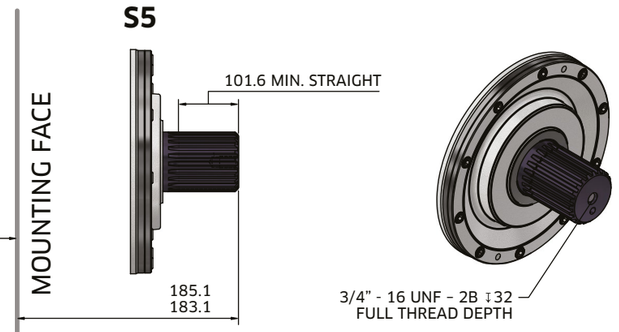

S5: EXTERNAL INVOLUTE SPLINE TO BS3550-1963 FLAT ROOT, SIDE FIT, CLASS 1	
Number of Teeth	23
Pressure Angle	30°
Pitch	6/12
Major Diameter	3.9627"/3.9577" (100.65 / 100.53 mm)

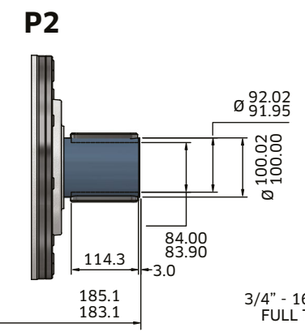

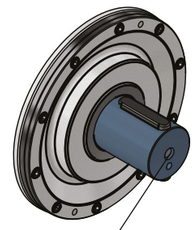

2 KEYS SUPPLIED - 24.066/24.000 WIDE 16.05/16.00 THICK

3/4" - 16 UNF - 2B ↧32 FULL THREAD DEPTH

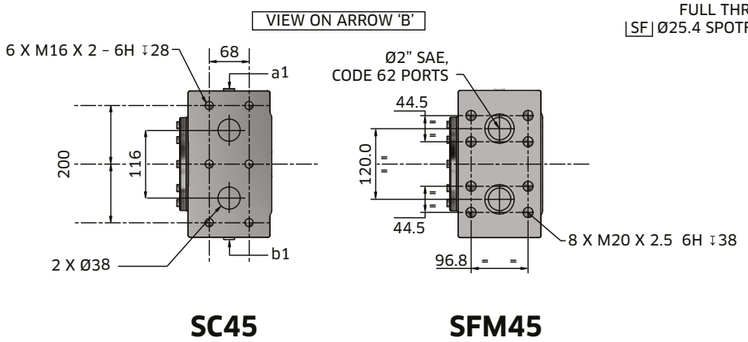

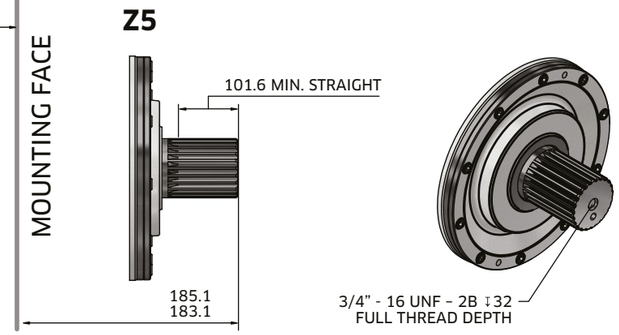

Z5: EXTERNAL INVOLUTE SPLINE TO DIN5480 W100 x 4 x 24 x 7h	
Number of Teeth (z)	24
Module (m)	4
Pressure Angle (a)	30°
Reference Diameter	100

Back to Contents Page

Kawasaki
Powering your potential

KAWSAKI PRECISION MACHINERY (UK) LTD.
Ernesettle Lane, Ernesettle, Plymouth, Devon PL5 2SA
Tel: +44 1752 364394
Mail: sales@kawasakihydraulics.com
Website: www.kawasakihydraulics.com

OTHER GLOBAL SALES OFFICES

JAPAN
Kawasaki Heavy Industry Ltd.
Precision Machinery Ltd.
Tokyo Office, World Trade Center Bldg.
4-1 Hamamatsu-cho 2-chome
Minato-ku, Tokyo 105-6116 Japan
Tel: +81 3 3435 6862
Website: www.khi.co.jp/kpm

U.S.A.
Kawasaki Precision Machinery (U.S.A.), Inc.
3838 Broadmoor Avenue S.E.
Grand Rapids, Michigan 49512, U.S.A.
Tel: +1 616 975 3101
Website: www.kpm-usa.com

CHINA
Kawasaki Precision Machinery Trading (Shanghai) Co., Ltd. 17th Floor (Room 1701), The Headquarters Building
No.168 Xizang Road (M), Huangpu District
Shanghai 200001, China
Tel: +86 21 3366 3800
Website: www.kawasakitrading.co.jp/eg/

Kawasaki Precision Machinery (Suzhou) Ltd.
668 JianLin Rd, New District, Suzhou, 215151 China
Tel: +86-512-6616-0365

Kawasaki Chunhui Precision Machinery (Zhejiang) Ltd.
No.200 Yasha Road Shangyu Economic Development Zone, Shansyu, Zhejiang, 312300, China
Tel: +86-575-8215-6999

INDIA
Wipro Kawasaki Precision Machinery Private Limited
No.15, Sy. No. 35 & 37, Kumbalgodu Industrial Area,
Kumbalgodu Village, Kengeri Hobli, Bengalore
- 560074 India
Website: www.wiprokpm.com/

The specified data is for product description purposes only and may not be deemed to be guaranteed unless expressly confirmed in the contract.

QR Code
Kawasaki Precision Machinery (UK) Ltd

Cat. No. M-2004/03.26