HMC325

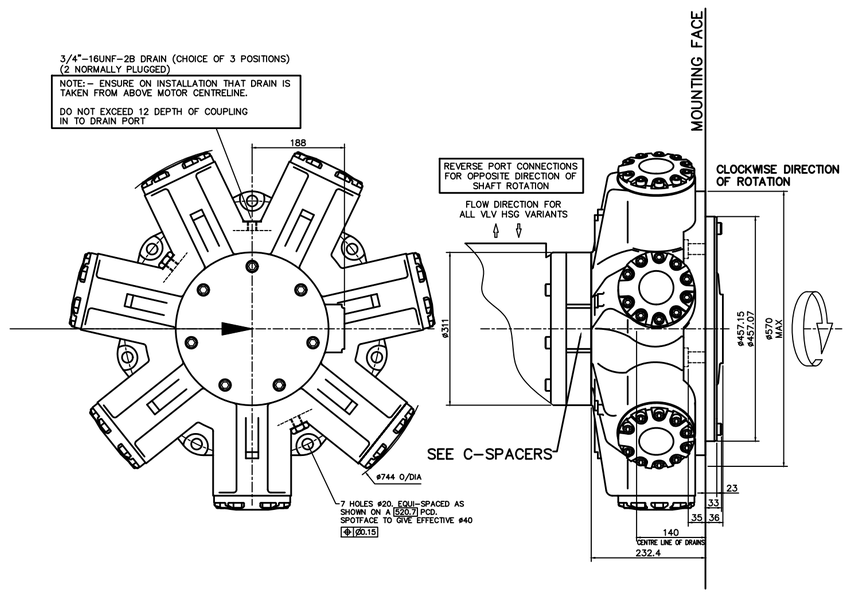

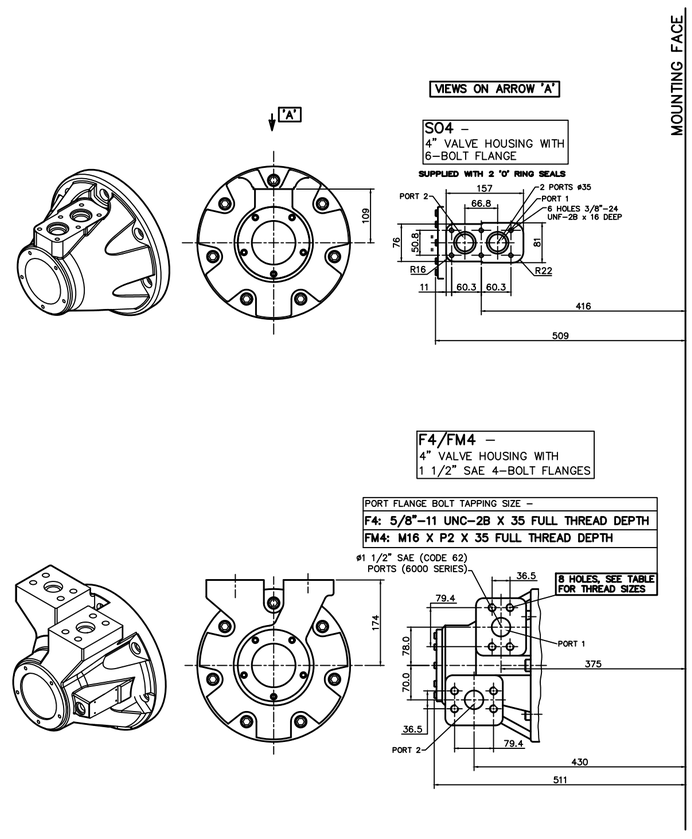

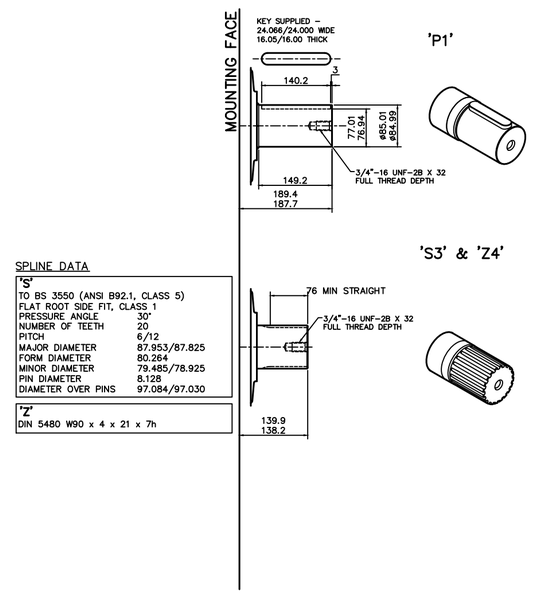

SPLINE DATA

'S'	
TO BS 3550 (ANSI B92.1, CLASS 5)	
FLAT ROOT SIDE FIT, CLASS 1	
PRESSURE ANGLE	30°
NUMBER OF TEETH	20
PITCH	6/12
MAJOR DIAMETER	87.953/87.825
FORM DIAMETER	80.264
MINOR DIAMETER	79.485/78.925
PIN DIAMETER	8.128
DIAMETER OVER PINS	97.084/97.030
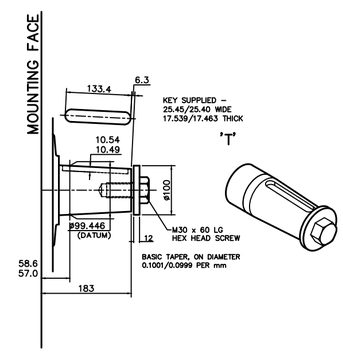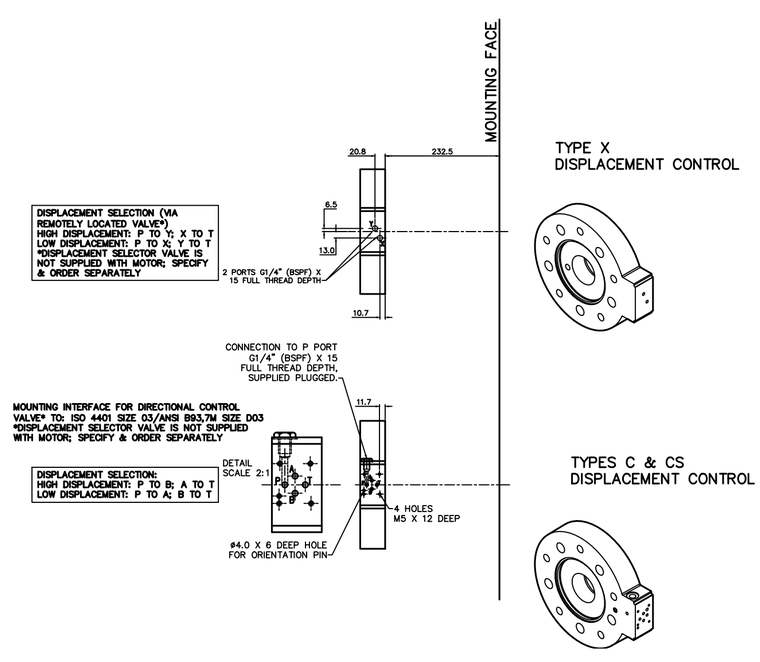
'Z'
DIN 5480 W90 x 4 x 21 x 7h