Kawasaki
Powering your potential

Precision Machinery Company

Fixed Displacement Radial Piston
Staffa Motor
HPB Series

CONTENTS

Specifications and Features 3 - 4

1. Ordering Code

1-1. Model Coding 5

2. Technical Information

2-1. Performance Data 6 - 11

2-2. Volumetric Efficiency Data 12

2-3. Shaft Power Calculations 13

2-4. Functional Symbols 14

2-5. Shaft Stress Limits 15

2-6. Bearing Life Notes 16

2-7. Circuit and Application Notes 17 - 19

2-8. Motor Operation at Low Temperatures 20

2-9. Freewheeling Notes 21

2-10. Crankcase Drain Connections 22

2-11. Installation Data 23

2-12. Special Features 24 - 36

2-13. Speed Sensing Options 37

3. Dimensions

3-1. HPB060/080 Installation 38 - 39

3-2. HPB100 Installation 40 - 44

3-3. HPB125 Installation 45 - 49

3-4. HPB150/200 Installation 50 - 54

3-5. HPB270 Installation 55 - 56

3-6. HPB325 Installation 57 - 67

HPB Series

Fixed Displacement Radial Piston Hydraulic Motor

General Descriptions

The Kawasaki Staffa range of high torque low speed fixed displacement radial piston hydraulic motors consists of 8 frame sizes ranging from the HPB060 to HPB325. Capacity ranges from 983 to 5,310cc/rev.

The rugged, well proven design incorporates high efficiency combined with good breakout torque and smooth running capability. Various features and options are available including, on request, mountings to match competitors' interfaces.

The Kawasaki Staffa range also includes dual and triple displacement motors. To obtain details of these product ranges please See HMC, HPC and HMF series datasheets.

Features

- **Very high power limit**
- **Rugged, reliable, proven design**
- **Unique hydrostatic balancing provides minimum wear and extended life**
- **High volumetric and mechanical efficiency**
- **Capacities range from 983 to 5,310cc/rev**
- **Large variety of shaft and porting options**
- **Output torque up to 23,000Nm**
- **Wide range of mounting interfaces available**
- **Alternative displacements also available**

Motor Type	Displace-ment	Ideal Specific Torque	Mechanical Efficiency	Operating Pressure	Peak Pressure	Power Rating	Speed Rating
	cc/rev	N m/bar	%	bar	bar	kW	rpm
HPB060	983	15.6	93.3	300	405	131	450
HPB080	1344	21.4	94.4	300	405	147	340
HPB100	1600	25.5	95.4	300	405	165	270
HPB125	2050	32.6	94.5	300	405	202	300
HPB150	2470	39.3	95.1	300	405	234	250
HPB200	3087	49.1	96.1	300	405	261	230
HPB270	4310	68.6	96.1	300	405	278	150
HPB325	5310	84.5	96.1	300	405	278	150

**For detailed performance figures see Section 2-1*

1 Ordering Code

1-1 Model Coding

F11/HPB 060 / S3 V/ FM3/Tj/ */ P*****

Fluid Type

Blank	Mineral oil
F3	Phosphate ester (HFD fluid)
F11	Water based fluids (HFA, HFB & HFC)
Alternative fluids contact Kawasaki	

Model Type

HPB	Standard
HPHDB	Heavy duty

Motor Frame Size

See options Section 2-1

Shaft Type

See Section 3. Dimensions

Shaft Orientation

Blank	Horizontal and vertically down
V	Vertically Up

Main Port Connections

See Section 3. Dimensions

Special Features

P*****	Special features (see Section 2-12)
PL****	Non-catalogued features, (****) = number assigned by Kawasaki as required

Design Series Number

Current series for HPB motors

Speed Sensor

Blank	None
Tj*	Square wave output with directional signal*
Tk	Combines Tj with the T401 instrument to give a 4 to 20 mA output proportional to speed. Directional signal and speed relay output.

See Section 2-13

1-1 Model Coding

Special Features Suffix

/ P * * * * *

Shaft Seal Enhancements

A	High pressure shaft seal
B	Improved shaft seal life
C	High pressure shaft seal & improved shaft seal life
0	None

See Section 2-12 for details

External Protection

B	Marine-specification primer paint
D	Unpainted
E	Marine Specification Cylinder Heads
F	Marine spec Cylinder Heads + Marine specification paint HP20
G	Marine spec Cylinder Heads + Carboline grey paint
0	None

See Section 2-12 for details

Installation Features

A	Drain port adaptor x 1
B	Drain port adaptor x 2
C	Φ21 mm mounting holes
D	Φ22 mm mounting holes
E	Φ21 mm mounting holes & Drain port adaptor x 1
F	Φ21 mm mounting holes & Drain port adaptor x 2
G	Φ22 mm mounting holes & Drain port adaptor x 1
H	Φ22 mm mounting holes & Drain port adaptor x 2
0	None

See Section 2-11 for details

Valve Enhancements

A	Improved cavitation resistance
B	Anti-clockwise
C	Thermal shock resistance
D	Improved caviation resistance & anti-clockwise
E	Improved cavitation resistance & thermal shock resistance
F	Anti-clockwise & thermal shock resistance
G	Improved cavitation resistance & anti-clockwise & thermal shock resistance
0	None

See Section 2-12 for details

Performance Enhancements

A	Increased starting torque
0	None

See Section 2-12 for details

2 Technical Information

2-1 Performance Data

Rating definitions

Continuous rating

For continuous duty the motor must be operating within each of the maximum values for speed, pressure and power.

Intermittent rating

Operation within the intermittent power rating (up to the maximum continuous speed) is permitted on a 15% duty basis, for periods up to 5 minutes maximum.

Intermittent max pressure

Intermittent max pressure: 300 bar.
This pressure is allowable on the following basis:

a) Up to 50rpm 15% duty for periods up to 5 minutes maximum.
b) Over 50rpm 2% duty for periods up to 30 seconds maximum.

Static pressure to DNV rules 405bar (DNV-GL-RU-Ship Part 4).

Limits for fire resistant fluids

Fluid Type	Continuous Pressure (bar)	Intermittent Pressure (bar)	Max Speed (rpm)	Model Type
HFA 5/95 oil-in-water emulsion	130	138	50% of limits of mineral oil	All models
HFB 60/40 water-in-oil emulsion	138	172	As for mineral oil	All models
HFC water glycol	103	138	50% of limits of mineral oil	All models
HFD phosphate ester	250	300	As for mineral oil	All models

2-1 Performance Data

Specifications

Motor Type	Displace-ment (cc/rev)	Ideal Torque (N m/bar)	Average Running Mechanical Efficiency (%)	Average Starting Mechanical Efficiency (%)	Max Cont. Speed (rpm)	Max Cont. Power with Flushing (kW)	Max Cont. Power (kW)	Max Cont. Pressure (bar)	Max Int. Pressure (bar)
HPB060 (FM3)	983	15.6	93.0	80.1	450	131	115	250	300
HPB060 (FM4)	983	15.6	93.0	80.1	490	131	115	250	300
HPB080 (FM3)	1,344	21.4	94.4	84.5	340	147	130	250	300
HPB080 (FM4)	1,344	21.4	94.4	84.5	430	147	130	250	300
HPB100 (FM3)	1,600	25.5	94.5	86.2	270	165	140	250	300
HPB100 (FM4)	1,600	25.5	94.5	86.2	365	165	140	250	300
HPB125 (FM3)	2,050	32.6	94.5	81	215	173	135	250	300
HPB125 (FM4)	2,050	32.6	94.5	81	300	202	150	250	300
HPB150 (FM3)	2,470	39.3	95.4	83.8	200	195	156	250	300
HPB150 (FM4)	2,470	39.3	95.4	83.8	250	234	185	250	300
HPB200 (FM3)	3,087	49.1	96.3	87	175	216	174	250	300
HPB200 (FM4)	3,087	49.1	96.3	87	230	261	210	250	300
HPB270	4,310	68.6	95.8	87.2	150	278	215	250	300
HPB325	5,310	84.5	96.3	87.9	130	278	215	250	300

Other non-standard displacements are possible - check with Kawasaki for details.

2-1 Performance Data (cont)

Output Torque Curves

These torque curves indicate the maximum output torque and power of a fully run-in motor for a range of pressures and speeds when operating with zero outlet pressure on Mineral Oil of 50cSt (232 SUS) viscosity. High return line pressures will reduce torque for a given pressure differential.

HPB060

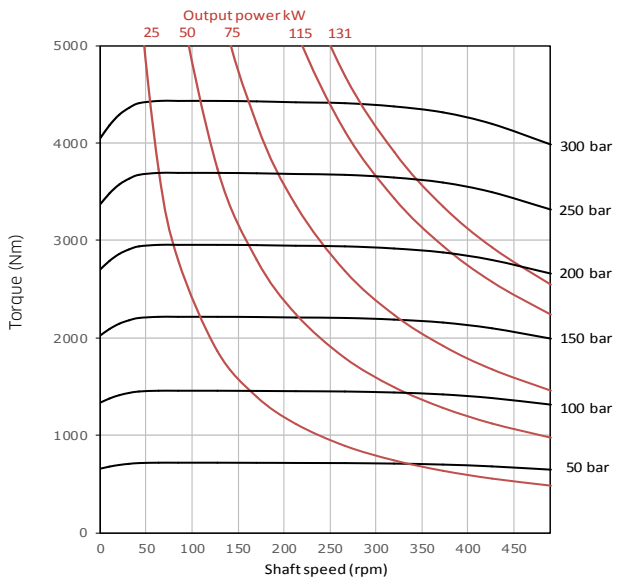

HPB080

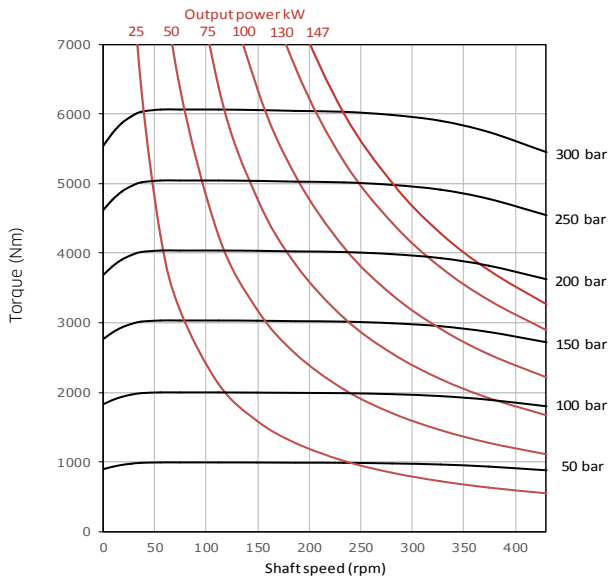

HPB100

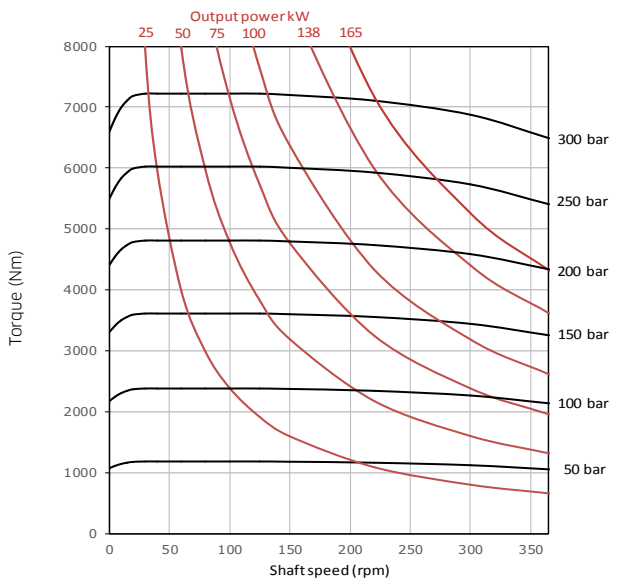

HPB125

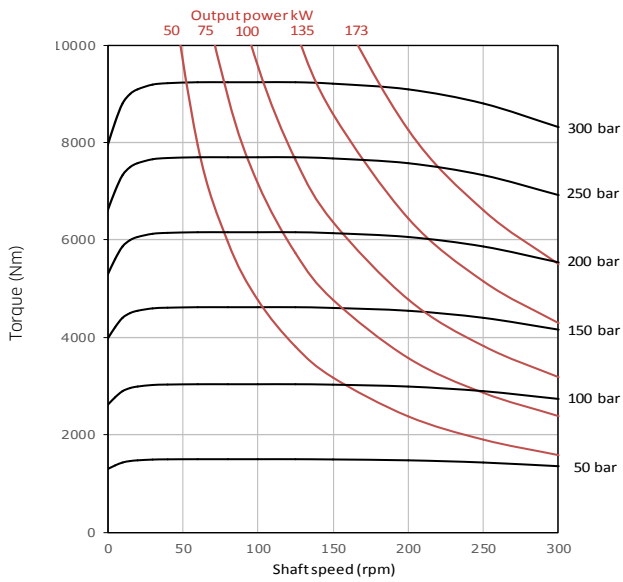

2-1 Performance Data (cont)

Output Torque Curves (cont)

HPB150

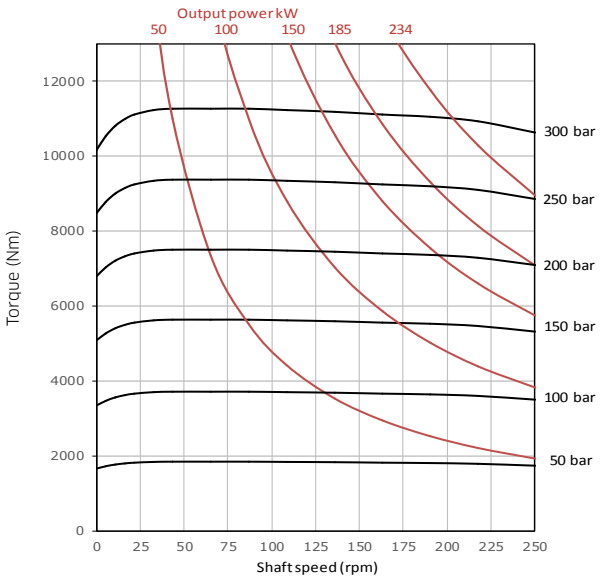

HPB200

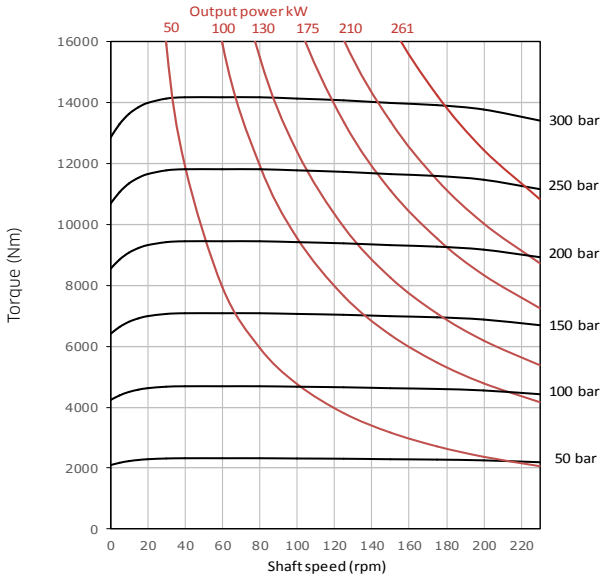

HPB270

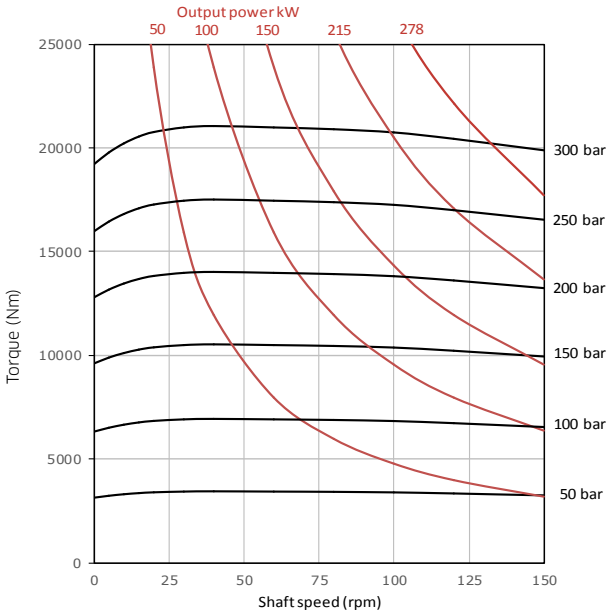

HPB325

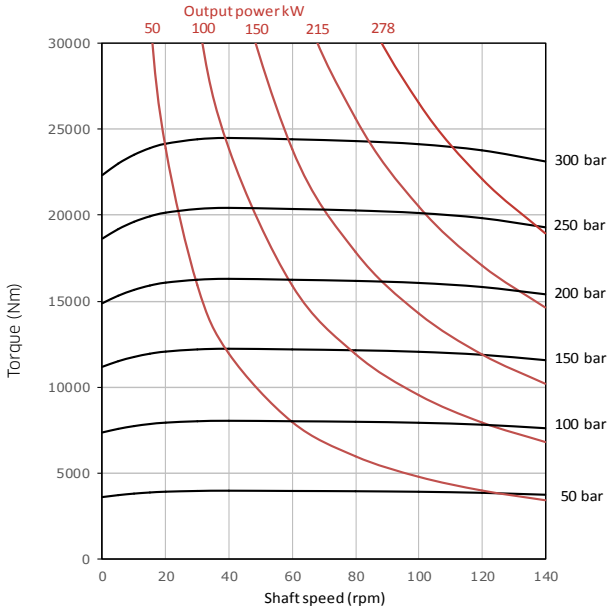

2-2 Volumetric Efficiency Data

Motor Type	Displacement	Zero Speed Constant	Speed Constant	Creep Speed Constant	Crankcase Leakage Constant
HPB	**cc/rev**	**K_1**	**K_2**	**K_3**	**K_4**
HPB060	983	9.50	45.70	7.80	7.90
HPB080	1,344	9.50	45.70	5.80	7.90
HPB100	1,600	9.50	45.70	4.80	7.90
HPB125	2,050	6.10	38.50	3.00	4.25
HPB150	2,470	6.10	38.50	2.50	4.25
HPB200	3,087	6.10	38.50	2.00	4.25
HPB270	4,310	6.50	37.30	1.50	6.00
HPB325	5,310	6.50	40.00	1.30	6.00

Fluid Viscosity	Viscosity Factor
cSt	**Kv**
20	1.58
25	1.44
30	1.30
40	1.10
50	1.00
60	0.88

Qt (total leakage)	= $[K_1 + n/K_2] \times \Delta P \times Kv \times 0.005$	l/min
Creep speed	= $K_3 \times \Delta P \times Kv \times 0.005$	rpm
Crankcase leakage	= $K_4 \times \Delta P \times Kv \times 0.005$	l/min
ΔP	= differential pressure	bar
n	= speed	rpm

The motor volumetric efficiency can be calculated as follows:

$$\text{Volumetric efficiency (\%)} = \left[\frac{(\text{speed} \times \text{disp.})}{(\text{speed} \times \text{disp.}) + Q_t}\right] \times 100$$

Example:

HPB200 motor with displacement of 3.087 l/rev.

Speed	60rpm
Differential pressure	200bar
Fluid viscosity	50 cSt

Total leakage = $(K_1 + n/K_2) \times \Delta P \times Kv \times 0.005$ l/min

= $(6.10 + 60/38.50) \times 200 \times 1 \times 0.005$

= 7.66 l/min

$$\text{Volumetric efficiency} = \left[\frac{(60 \times 3.087)}{(60 \times 3.087) + 7.66}\right] \times 100$$

= 96.0%

2-3 Shaft Power Calculation

Example

Firstly, to find the maximum differential pressure ΔP at rated speed:

Select the rated shaft power (W) for the motor from the performance data table (in Section 2-1).
This is presented in kilowatts so must be converted to watts (x1000).

Then also take the actual average running torque in N m/bar (T_0) and the rated shaft speed in rpm (n).

$$W = \frac{T_0 \cdot \Delta P \cdot 2\pi \cdot n}{60}$$

Or to find maximum ΔP then use:

$$\Delta P = \frac{60 \cdot W}{2\pi \cdot T_0 \cdot n}$$

HPB125-FM4 Example:

Rated shaft power, W (W):	150,000
Average actual running torque, T_0 (Nm/bar):	32.6
Average running mechanical efficiency(Nm/bar):	94.5%
Rated shaft speed, n (rpm):	300

$$\Delta P = \frac{60 \times 150{,}000}{2\pi \times 32.6 \times 300}$$

ΔP= 146 bar (max.)

Secondly, to find the maximum speed at rated pressure (using the same information as before):

$$n = \frac{60 \cdot W}{2\pi \cdot T_0 \cdot \Delta P}$$

Rated pressure (bar): 250

$$n = \frac{60 \times 150{,}000}{2\pi \times 32.6 \times 250}$$

n = 176rpm (max.)

In summary, operating the motor within its shaft power limit, at rated speed, would give a maximum pressure of 146 bar, and operating the motor at rated pressure, would give a maximum speed of 176rpm.

Notes

1) The maximum calculated speed is based on a rated inlet pressure of 250bar.
2) The maximum shaft power is only allowable if the motor drain temperature remains below 80°C.
3) The maximum calculated differential pressure assumes that the low pressure motor port is less than 30bar.

2-4 Functional Symbols

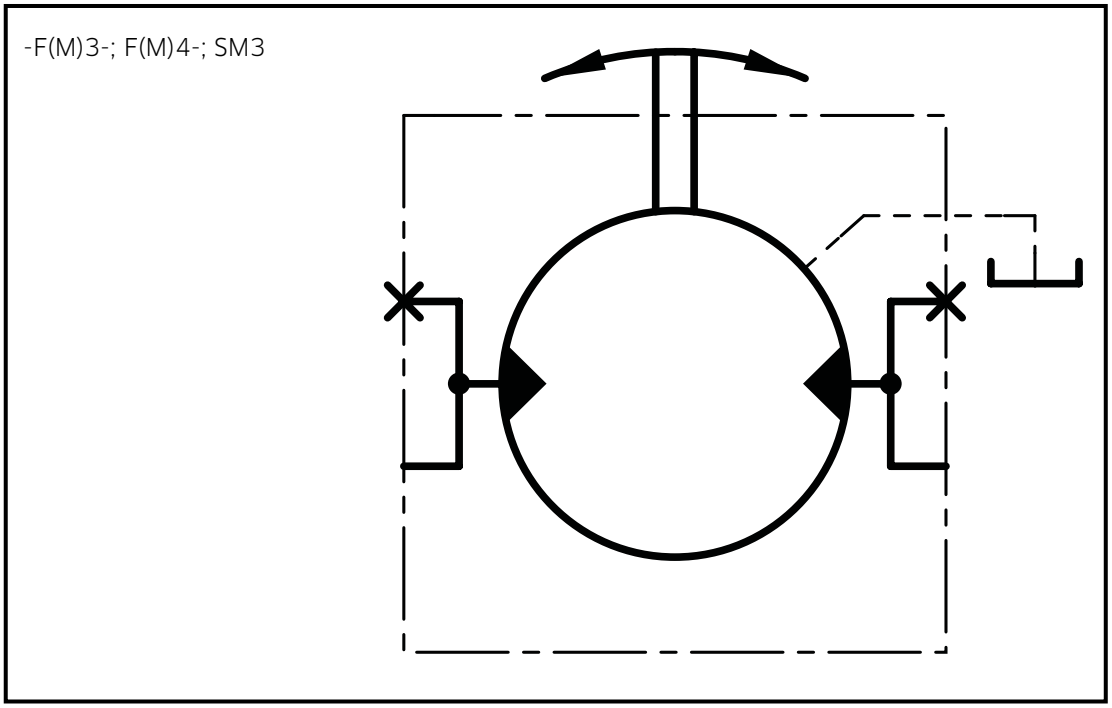

2-5 Stress Limits

When applying large external radial loads, consideration should also be given to motor bearing lives (see Section 2-6).

Motor Frame Size	Shaft Types	Maximum External Radial Bending Moment [Nm]
HPB060, 080 & 100	P, S, Z & T	5,500
HPB125, 150 & 200	P1, S3, S4, Z3, & T	6,600
HPHDB125, 150, 200	S5, Z5 & P2	12,750
HPB270 & 325	P1, S3, Z3 & T	7,500
HPHDB270 & 325	P2, S5 & Z5	15,900

Example:

Determine the maximum radial shaft load of a HPB080 motor:

Radial load offset, A = 100mm
Maximum radial load, W = 5,500 (see table)/100
= 55kN (5,607 kg)

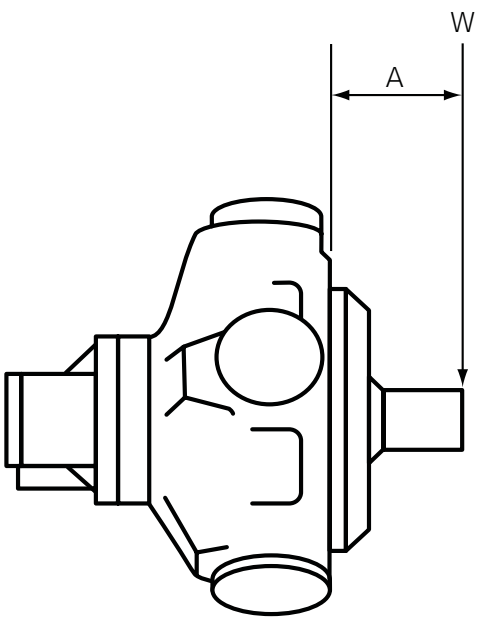

A = Distance from mounting face to load centre (mm)

W = Side load (N)

NOTE:
The offset distance A is assumed to be greater than 50mm. Contact Kawasaki if this is not the case.

2-6 Bearing Life Notes

Consideration should be given to the required motor bearing life in terms of baring service life. The factors that will determine bearing life include:

1) Duty cycle - time spent on and off load

2) Speed

3) Differential pressure

4) Fluid viscosity

5) External radial shaft load

6) External axial shaft load

NOTE:
A heavy duty HPB motor can be ordered to further improve bearing life.
Consult Kawasaki for a detailed bearing life calculation.

2-7 Circuit and Application Notes

Starting Torque

Staffa motors are very efficient even at low speeds. The starting mechanical efficiencies given in Section 2-1 should be used for speeds lower than 15rpm. These values, and the torque curves shown in Section 2-1 may vary with system parameters.

Low Speed Operations

Minimum operating speeds are determined by the hydraulic system and load conditions (load inertia, drive elasticity, etc.) Recommended minimum speeds are shown below:

Model Type	rpm
HPB060/080/100	3
HPB/125/150/200	3
HPB270/325	2

High Back Pressure

When both inlet and outlet ports are pressurised continuously, the lower port pressure must not exceed 100 bar at any time.

NOTE: High back pressure reduces the effective torque output of the motor.

Boost Pressure

When operating as a motor the outlet pressure should equal or exceed the crankcase pressure. If pumping occurs (i.e. overrunning loads) then a positive pressure, "P", is required at the motor ports. Calculate "P" (bar) from the operating formula Boost Formula $P = 1 + \frac{N^2 \times V^2}{K} + C$

Where P is in bar, N = motor speed (rpm), V = motor displacement (cc/rev), C = crankcase pressure (bar) and K=a constant from the table below:

Motor	Porting	Constant (K)
HPB060, HPB080 & HPB100	F(M)3 SM3	1.8×10^{10}
HPB125, HPB150 & HPB200	FM(3) SM3	4.0×10^{10}
	FM(4)	8.0×10^{10}
HPB270 & HPB325	FM(4)	7.2×10^{10}

2-7 Circuit and Application Notes (cont)

The flow rate of oil needed for the make-up system can be estimated from the crankcase leakage data (see Section 2-2 for calculation method). Allowances should be made for other system losses and also for "fair wear and tear" during the life of the motor, pump and system components.

Cooling Flow

Operating within the continuous rating does not require any additional cooling.

For operating conditions above "continuous", up to the "intermittent" rating, additional cooling oil may be required. This can be introduced through the spare crankcase drain ports.

Consult Kawasaki about such applications.

Motorcase Pressure

With the standard shaft seal fitted, the motor casing pressure should not exceed 3.5bar.

NOTES

1) The casing pressure at all times must not exceed either the motor inlet or outlet pressure.

2) High pressure shaft seals are available for casing pressure of 10bar.

3) Check installation dimensions for maximum crankcase drain fitting depth.

CAUTION

For trouble free operation the motor's crankcase pressure must always be lower than both of the motor port pressures:

$P_{case} < P_{in}$ and $P_{case} < P_{out}$

Hydraulic Fluids

Dependent on motor (see model code fluid type - Section 1-1) suitable fluids include:

a) Antiwear hydraulic oils

b) Phosphate ester (HFD fluids)

c) Water glycols (HFC fluids)

d) 60/40% water-in-oil emulsions (HFB fluids)

e) 5/95% oil-in-water emulsions (HFA fluids)

f) Antiwear environmentally acceptable lubricants (EALs)

Some fluids require a reduction in pressure and speed limits. Please see table in Section 2-1.

Viscosity limits when using any fluid except oil-in-water (5/95) emulsions are:

Max. off load:	**2,000cSt** (9270 SUS)
Max. on load:	**150cSt** (695 SUS)
Optimum:	**50cSt** (232 SUS)
Minimum:	**25cSt** (119 SUS)

Temperature Limits

Ambient min.	-30°C (-22°F)
Ambient max.	+70°C (158°F)

Max. operating temperature range.

	Mineral oil	**Water containing**
Min	-20°C (-4°F)	+10°C (50°F)
Max.	+80°C (175°F)	+54°C (130°F)

NOTE: To obtain optimum services life from both fluid and hydraulic systems components, a fluid operating temperature of 40°C is recommended.

2-7 Circuit and Application Notes (cont)

Mineral Oil Recommendations

The fluid should be a good hydraulic grade, non-detergent mineral oil. It should contain anti-oxidant, antifoam and demulsifying additives. It must contain antiwear or extreme pressure (EP) additives. Automatic transmission fluids and motor oils are not recommended.

Biodegradable Fluid Recommendations

Well-designed environmentally acceptable lubricants (EALs) may be used with Staffa motors. The EAL must be designed for use in hydraulic systems and have a synthetic ester base. Additives should be as listed for mineral oils, above. The performance of EALs with hydraulic systems vary widely and so checks for seal compatibility, copper alloy compatibility, oxidation resistance and lubrication properties should be carried out before selecting an EAL. For help with EALs please contact Kawasaki.

Filtration

Full flow filtration (open circuit), or full boost flow filtration (closed circuit) to ensure system cleanliness to ISO4406 code 22/18/13 or cleaner.

Noise Levels

The airborne noise level is less than 66.7dB(A) DIN & dB(A) NFPA through the continuous operating envelope. Where noise is a critical factor, installation resonances can be reduced by isolating the motor by elastomeric means from the structure and the return line installation. Potential return line resonances originating from liquid borne noise can be further attenuated by providing a return line back pressure of 2 to 5bar.

Polar moment of intertia and mass table

Motor Frame Size	Polar Moment of Intertia (kg m^2) (Typical data)	Mass (kg) (Approx. all models)
HPB060	0.0500	144
HPB080	0.0600	144
HPB100	0.0760	144
HPB125	0.2200	217
HPB150	0.2500	265
HPB200	0.2700	265
HPB270	0.4900	420
HPB325	0.5000	429

2-8 Motor Operation at Low Temperature

When operating the motor at low temperature consideration should be given to the fluid viscosity. The maximum fluid viscosity before the shaft should be turned is 2,000cSt. The maximum fluid viscosity before load is applied to the motor shaft is 150cSt.

If low ambient temperature conditions exist, then a crankcase flushing flow of at least 5 l/min should be applied to the motor during periods when the motor is not in use.

The shaft seal temperature limits for both medium and high pressure applications are shown in the table below.

	Non-operating temperature limits	Minimum operating temperature
Standard pressure shaft seal	below minus 40°C and above 100°C	minus 30°C
High pressure shaft seal	below minus 30°C and above 120°C	minus 15°C

All seals are very brittle below minus 40°C and are likely to break very easily and due to their sluggish response may not provide a 100% leak free condition.

It should be noted that the maximum continuous operating temperature within the motor crankcase is plus 80°C.

2-9 Freewheeling Notes

All Staffa motors can be used in freewheeling applications.

In all circumstances it is essential that the motor is unloaded (A and B ports connected together) and that the circuit is boosted.

The required boost pressure is dependent on both the speed and displacement conditions.

It should be noted that for HPB series motors, to achieve freewheel, large flows will have to re-circulate around the motor.

This will require a large recirculating valve and consideration of circuit cooling as the motor will be generating a braking torque.

It is for these reasons that HMC, HPC or HMF series motors are the preferred option for freewheeling applications.

See HMB, HMC and HPC datasheets.

2-10 Crankcase Drain Connections

Motor Axis - horizontal

The recommended minimum pipe size for drain line lengths up to approx. 5m is 12.0mm (½") bore. Longer drain lines should have their bore size increased to keep the crankcase pressure within limits.

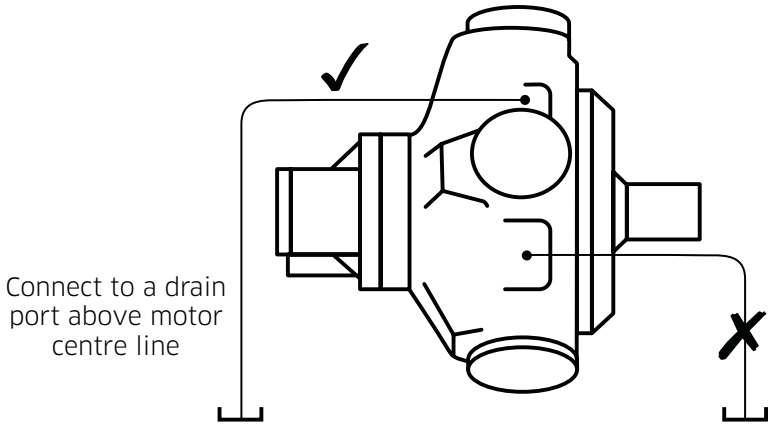

Motor Axis - vertical shaft up

Specify "V" within the model code for extra drain port, G¼" (BSPF). Connect this port into the main drain line downstream of a 0.35bar check valve to ensure good bearing lubrication. The piping arrangement must not allow syphoning from the motorcase. (refer to installation drawing for details).

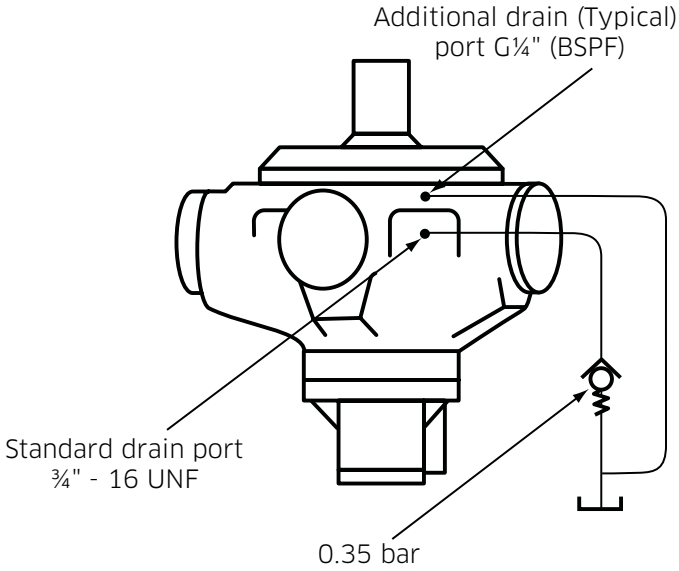

Motor Axis - vertical shaft down

The piping, from any drain port, must be taken above the level of the motorcase to ensure good bearing lubrication. The arrangement must not allow syphoning from the motorcase.

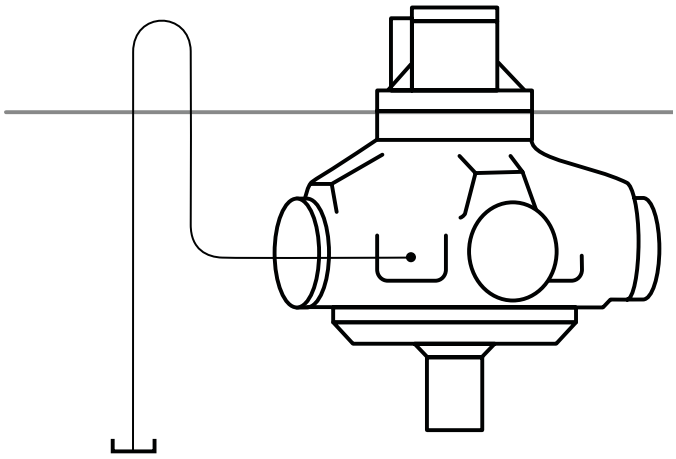

2-11 Installation Data

Spigot

The motor should be located by the mounting spigot on a flat, robust surface using correctly sized bolts.

The diametrical clearance between the motor spigot and the mounting must not exceed 0.15mm. If the application incurs shock loading, frequent reversing or high speed running, then high tensile bolts should be used, including one fitted bolt.

Bolt Torque

The recommended torque wrench setting for bolts is as follows:

M12	97 +/- 7Nm
M14	160 +/- 12Nm
M18	312 +/- 14 Nm
M20	407 +/- 14 Nm
M24	690 +/- 27 Nm
½" UNF	97 +/- 7 Nm
⅝“ UNF	265 +/- 14 Nm
¾“ UNF	393 +/- 14 Nm
1"	810 +/- 27 Nm

Shaft Coupling

Where the motor is solidly coupled to a shaft having independent bearings the shaft must be aligned to within 0.13mm TIR.

End of Motor Life

The motor unit must be completely empty upon disposal. It must be disposed of according to national regulations and safety information for the disposal of hydraulic fluids.

All individual parts of the motor unit must be recycled. Separate the motor unit parts according to: cast iron, steel, aluminium, non-ferrous metal, electronic waste, plastic, and seals.

2-12 Special Features

Feature	HPB 060/ 080	HPB 100	HPB 125	HPB 150/200	HPB 270	HPB 325
High Pressure Shaft Seal	●	●	●	●	●	●
Improved Shaft Seal Life	●	●	●	●	●	●
Improved Cavitation Resistance	●	●	●	●	●	●
Increased Starting Torque	○	○	●	●	●	●
Anti-clockwise Rotation	●	●	●	●	●	●
Thermal Shock Resistance	●	●	●	●	●	●
Drain Port Adaptor - ½" BSPP	●	●	●	●	●	●
Φ21mm Mounting Holes	●	●	●	●	●	●
Φ22mm Mounting Holes	●	●	●	●	●	●
Marine-specification Primer Paint	●	●	●	●	●	●
Marine-Style Cylinder Head	●	●	●	●	●	●

● Available
○ Not available

If a motor is to be ordered with any special features listed, please contact Kawasaki.

2-12 Special Features (cont)

High Pressure Shaft Seal

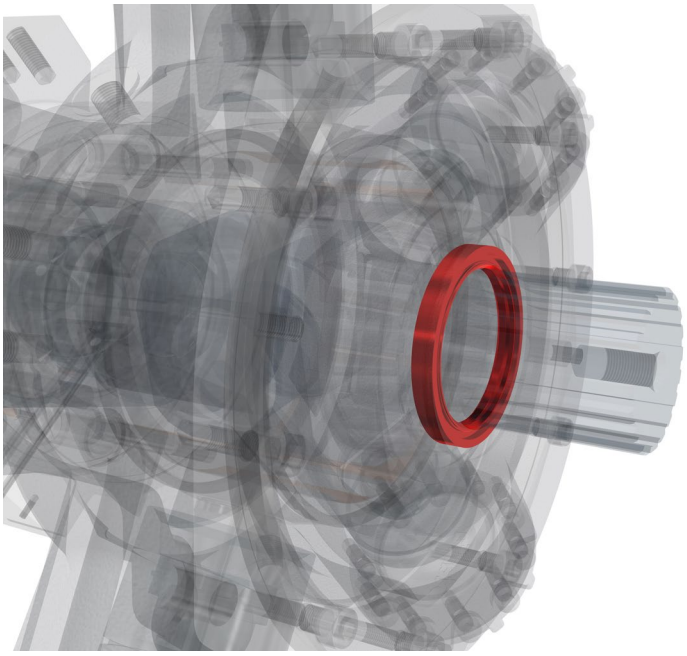

Description:

> 10bar rated

> Recommended for cold climates

> Rugged aluminium construction

Technical Information

Where crankcase pressure will be higher than 3.5 bar, the high pressure shaft seal should be selected.

Case pressure	≤ 10bar
Non-operating temperature limits	Below -30°C and above 120°C
Minimum operating temperature	-15°C
Maximum operating temperature	80°C
Minimum viscosity	2,000cSt
Maximum viscosity	150cSt

Applicable to:

HPB 060/ 080	HPB 100	HPB 125	HPB 150/200	HPB 270	HPB 325
●	●	●	●	●	●

2-12 Special Features (cont)

Improved Shaft Seal Life

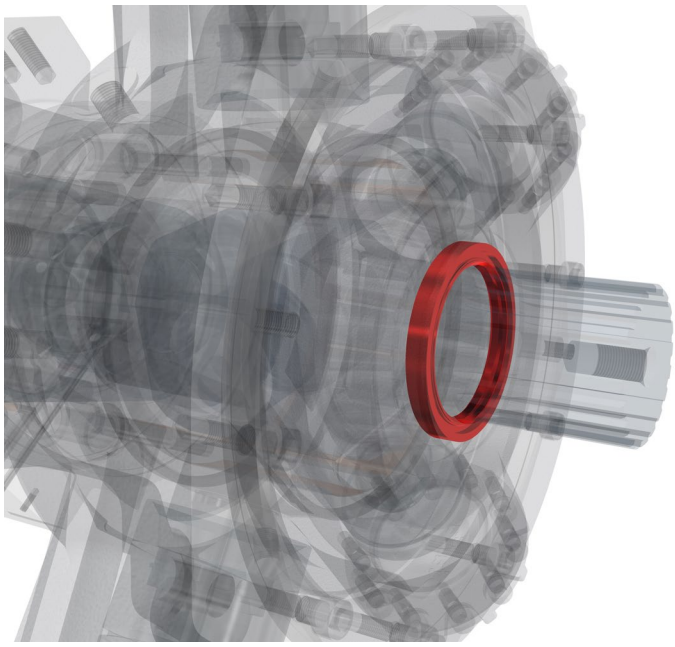

Description:

> Stainless steel sleeve prevents corrosion

> Improved wear resistance

> Recommended for corrosive environments

Technical Information

A well-established method of increasing rotary seal life in corrosive environments is to fit a thin-walled, stainless steel sleeve to the rotating shaft to provide a corrosion-resistant, wear-resistant counterface surface for the seal to run against. All HPB motors can be fitted with such sleeves upon request.

Sleeve material	A304/301 Stainless Steel
Sleeve surface finish	R_a 0.25 to 0.5µm (10 to 20µin)

Applicable to:

HPB 060/ 080	HPB 100	HPB 125	HPB 150/200	HPB 270	HPB 325
●	●	●	●	●	●

2-12 Special Features (cont)

Improved Cavitation Resistance

Description:

> **Recommended for overunning applications**

> **Protects against seal damage for short periods of operation in vacuum inlet conditions.**

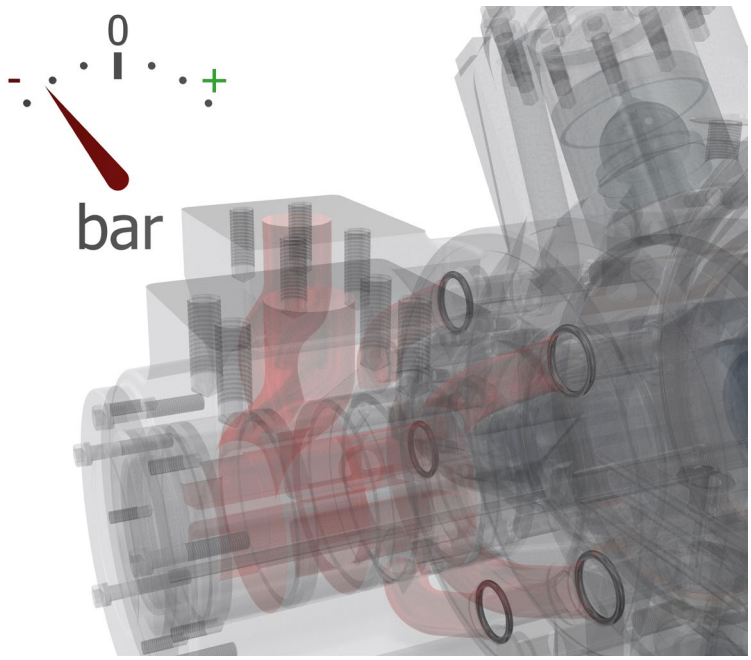

Cavitation can occur due to many different factors. Although it is not possible to make the HPB motor resistant to cavitation, certain features can be added to improve the motor's resistance to short periods of lost port pressure.

In applications where the HPB motor can be driven (like a pump) a risk arises that insufficient fluid will be provided to maintain a positive pressure at both main ports of the motor causing cavitation. The results of extended running at these conditions can be catastrophic to the motor's function.

The improved cavitation resistance feature should be considered where:

- Overrunning conditions may occur (load driving the motor)
- Loss of main port pressure while motor is rotating

Applicable to:

HPB 060/ 080	HPB 100	HPB 125	HPB 150/200	HPB 270	HPB 325
●	●	●	●	●	●

2-12 Special Features (cont)

Increased Starting Torque

Description:

- **Optimised for high break-out torque**
- **Recommended for low speed operation**
- **Improved service life for low speed applications**

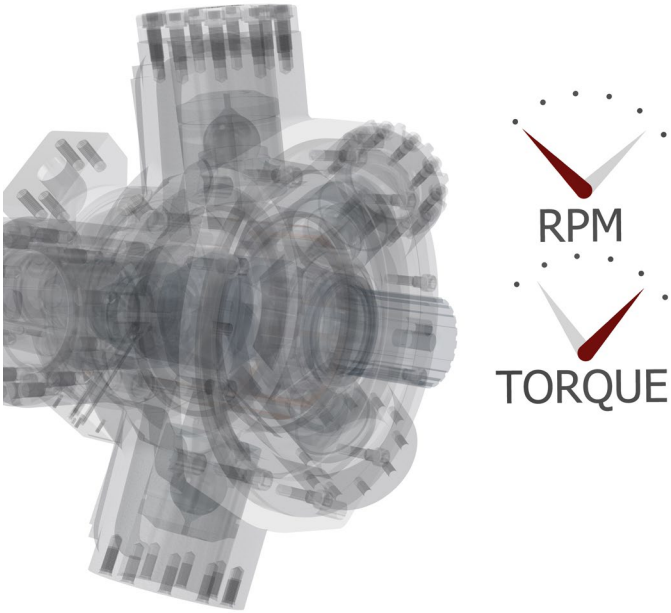

Technical Information

If an application demands the drive motor be run at speeds of less than 10 rpm for most of the duty cycle, or involves frequent start/stop or forward/reverse operation, the Staffa HPB motor range has it covered.

By optimising the HPB motor's design for low speeds, it is possible to increase the break out torque and low speed mechanical efficiency performance.

All figures given in Section 2-1 Performance Data are still valid when selecting this feature.

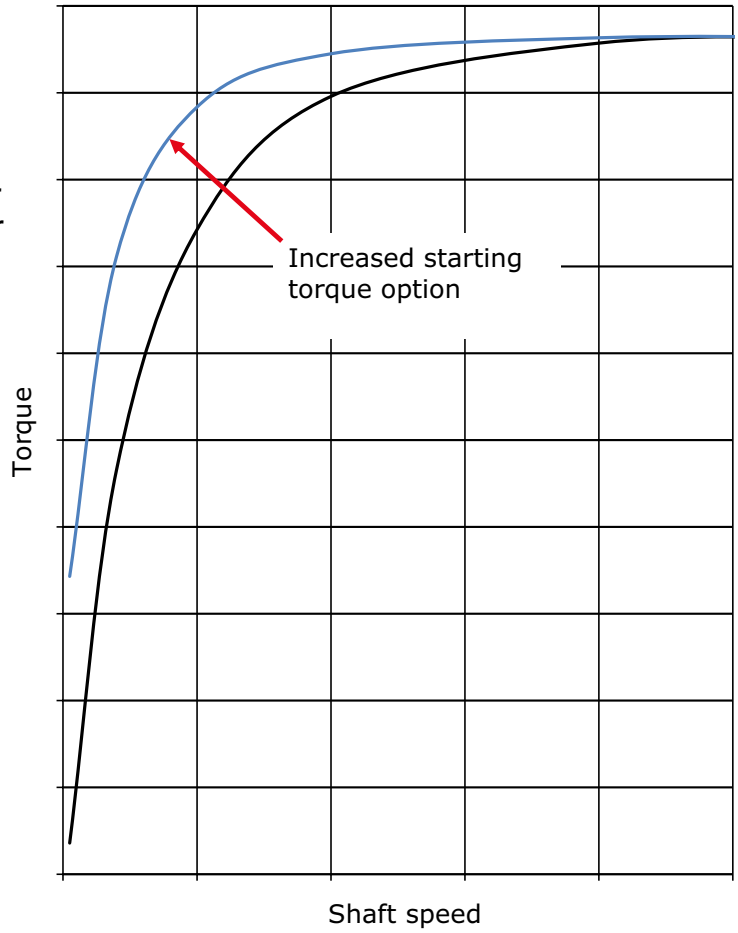

2-12 Special Features (cont)

Increased Starting Torque (cont)

Volumetric Performance

In order to achieve increased torque at low speeds the volumetric characteristics of the motor performance are changed.

When calculating leakage and volumetric efficiency use the constants shown here in place of those given for the standard motor in Section 2-1.

Motor Type	Displacement	Zero Speed Constant	Speed Constant	Creep Speed Constant	Crankcase Leakage Constant
	cc/rev	K1	K2	K3	K4
HPB125	2,050	12.86	38.50	4.55	11.01
HPB150	2,470	12.86	38.50	3.78	11.01
HPB200	3,087	12.86	38.50	3.02	11.01
HPB270	4,310	13.26	37.30	2.41	12.26
HPB325	5,310	13.26	40.00	2.08	12.26

Applicable to:

HPB 060/ 080	HPB 100	HPB 125	HPB 150/200	HPB 270	HPB 325
●	●	●	●	●	●

2-12 Special Features (cont)

Anti-Clockwise Rotation

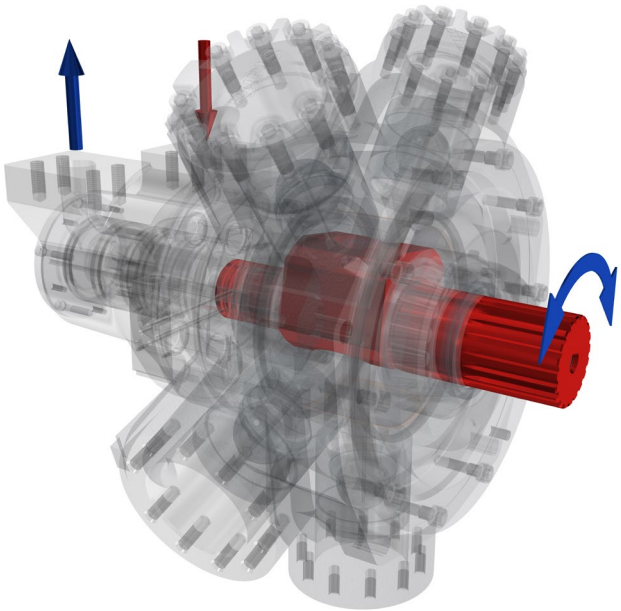

Description:

> Reduce installation complexity

> Standardise equipment designs

Technical Information

All HPB motors can be specified with an anti-clockwise rotation valve configuration. All performance and volumetric characteristics remain unchanged.

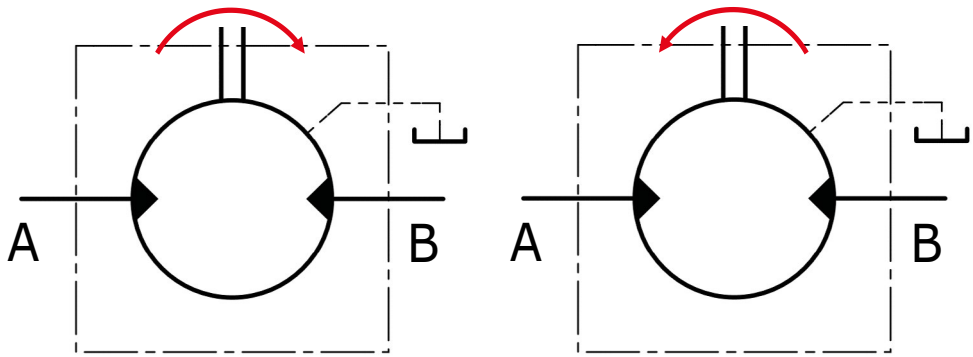

Standard motor

Anti-clockwise motor

Applicable to:

HPB 060/ 080	HPB 100	HPB 125	HPB 150/200	HPB 270	HPB 325
●	●	●	●	●	●

2-12 Special Features (cont)

Thermal Shock Resistance

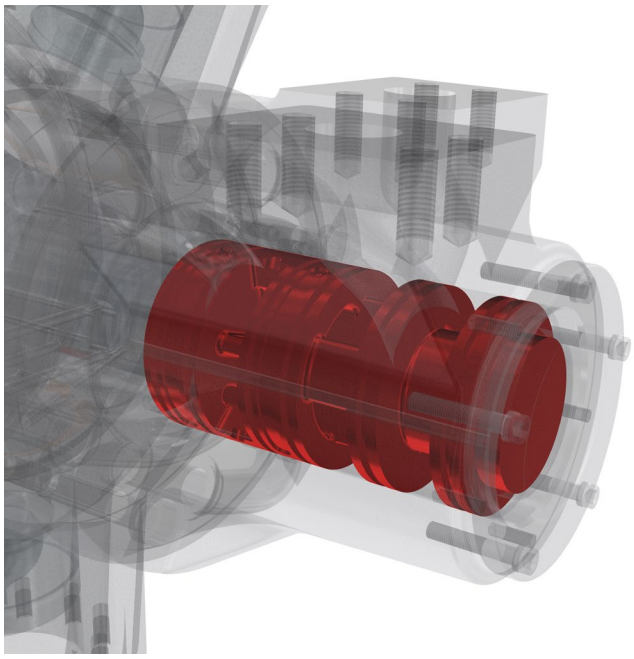

Description:

> Recommended for cold climates

> Optimised for start-up in freezing temperatures

> Engineered for total peace of mind

Technical Information

Starting up a cold system with warm hydraulic fluid is a known cause of heavy wear and potential seizure of hydraulic machinery. To minimise this potential risk, the HPB motor can be configured to combat thermal shocks to give complete peace of mind when operating in very cold climates.

Volumetric Performance

In order to provide thermal shock resistance the volumetric characteristics of the motor performance are changed. When calculating leakage and volumetric efficiency use the constants shown in Section 2-12 in place of those given for the standard motor in Section 2-1.

All figures given in Section 2-1 Performance Data are still valid when selecting this feature.

Note:
When operating at low temperature, consideration must be given to the guidance notes in Section 2-8 Motor Operation at Low Temperature.

2-12 Special Features (cont)

Thermal Shock Resistance (cont)

Motor Type	Geometric Displacement	Zero Speed Constant	Speed Constant	Creep Speed Constant	Crankcase Leakage Constant
	cc/rev	K1	K2	K3	K4
HPB060	983	11.10	45.70	11.38	7.90
HPB080	1,344	11.10	45.70	8.30	7.90
HPB100	1,600	11.10	45.70	6.99	7.90
HPB125	2,050	7.70	38.50	3.78	4.25
HPB150	2,470	7.80	38.50	3.52	4.25
HPB200	3,087	7.98	38.50	2.61	4.25
HPB270	4,310	8.38	37.30	1.91	6.00
HPB325	5,310	8.38	40.00	1.65	6.00

Applicable to:

HPB 060/ 080	HPB 100	HPB 125	HPB 150/200	HPB 270	HPB 325
●	●	●	●	●	●

2-12 Special Features (cont)

Drain Port Adaptors

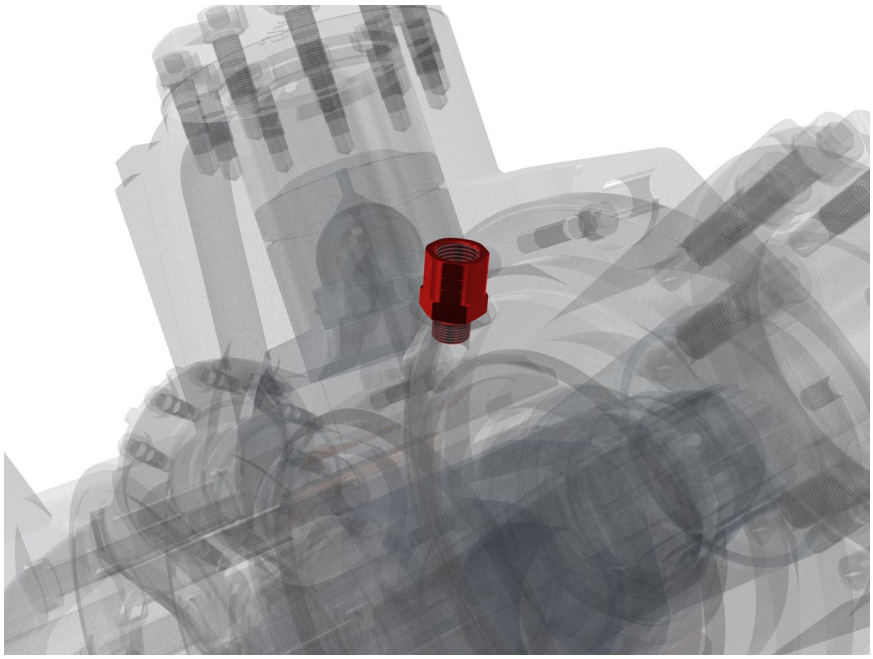

Description:

> Improves manufacturing logistics

> Motor supplied ready for connection to ½" BSPP male fitting

Technical Information

Motor Type	Adaptor Supplied
HPB060	¾" UNF 2B to ½" BSPP
HPB080	¾" UNF 2B to ½" BSPP
HPB100	¾" UNF 2B to ½" BSPP
HPB125	¾" UNF 2B to ½" BSPP

Motor Type	Adaptor Supplied
HPB150	¾" UNF 2B to ½" BSPP
HPB200	¾" UNF 2B to ½" BSPP
HPB270	¾" UNF 2B to ½" BSPP
HPB325	¾" UNF 2B to ½" BSPP

One or two drain adaptors can be supplied.

Applicable to:

HPB 060/ 080	HPB 100	HPB 125	HPB 150/200	HPB 270	HPB 325
●	●	●	●	●	●

2-12 Special Features (cont)

Mounting Hole Diameter

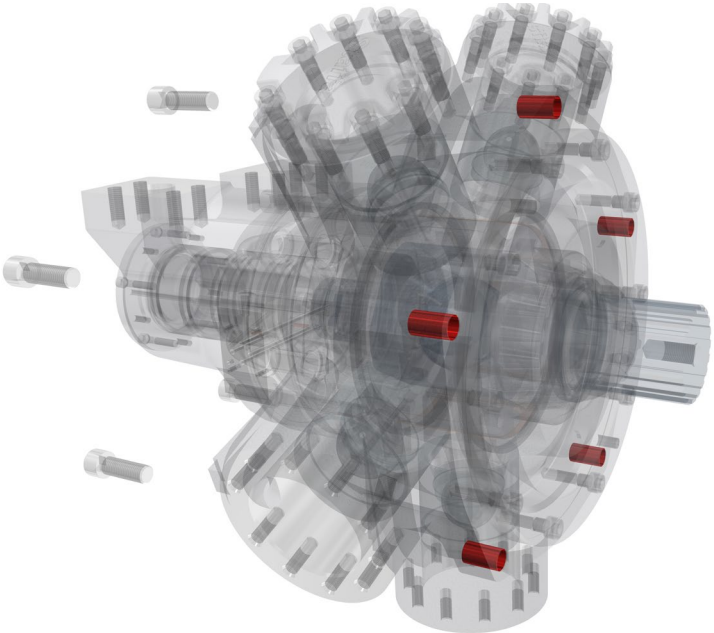

Description:

> Matching mounting holes to bolts

> Φ21mm and Φ22mm options available

Technical Information

In different markets, different bolt standards are adopted which may not be best suited to the standard Φ20mm mounting hole diameter on the HPB motors. To give a correct fit and optimum installation, Φ21mm or Φ22mm holes can be selected on larger frame sizes.

Applicable to:

HPB 060/ 080	HPB 100	HPB 125	HPB 150/200	HPB 270	HPB 325
●	●	●	●	●	●

2-12 Special Features (cont)

Marine Specification Primer Paint

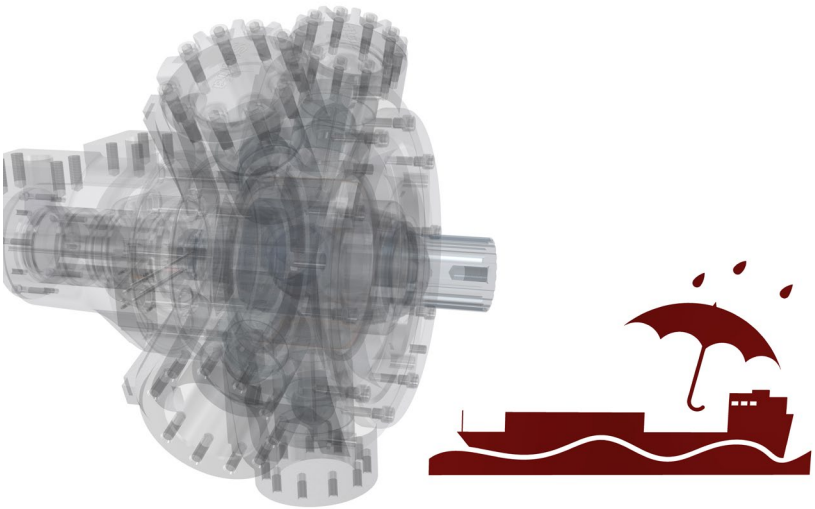

Description:

> Improves corrosion and water resistance of the finishing system

> Excellent adhesion strength

> Recommended for marine applications

Technical Information

Colour	Red oxide
Type	Single pack epoxy etching primer
Standard	BS 3900 part A 8
Dry film thickness	> 12µm

Applicable to:

HPB 060/ 080	HPB 100	HPB 125	HPB 150/200	HPB 270	HPB 325
●	●	●	●	●	●

2-12 Special Features (cont)

Marine-Style Cylinder Head

Description:

> Reduces water entrapment

> Improves corrosion resistance

> Aids paint coverage

When top-coat paint solutions are applied to any surface, the coverage can easily become sub-optimal for very complex shapes. As the protection of the Staffa motor's external surfaces is critical in corrosive environments, the marine-style cylinder head, which is geometrically simplified in comparison to the standard design, can be specified for all HMF motors to aid in the optimal application of the top-coat paint solution.

Technical Information

No installation dimensions or after-market parts are affected when selecting this option as it is completely interchangeable with the standard cylinder head. Existing motors may be upgraded to use these cylinder heads without the need for any other replacement parts.

Applicable to:

HPB 060/ 080	HPB 100	HPB 125	HPB 150/200	HPB 270	HPB 325
●	●	●	●	●	●

2-12 Special Features (cont)

Tj speed sensor technical specification

The Tj speed sensor is a hall effect dual channel speed probe that can provide feedback of both speed and direction.

Signal Outputs:	Square wave plus directional signal
Power Supply:	8 to 32V @ 40mA
Protection Class:	IP68
Output Frequency:	16 pulses/revolution

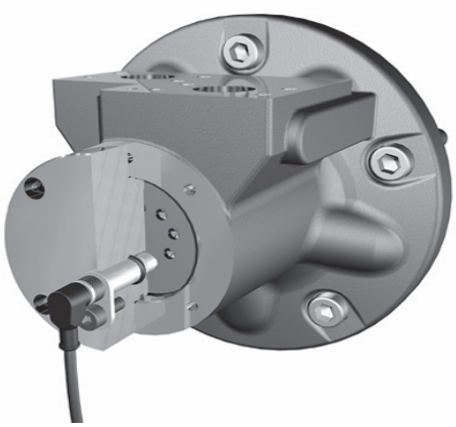

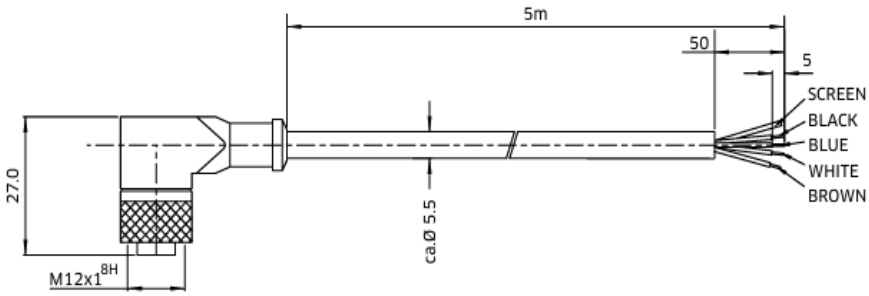

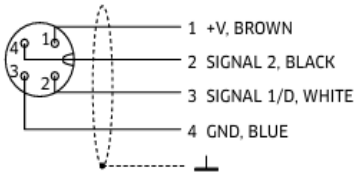

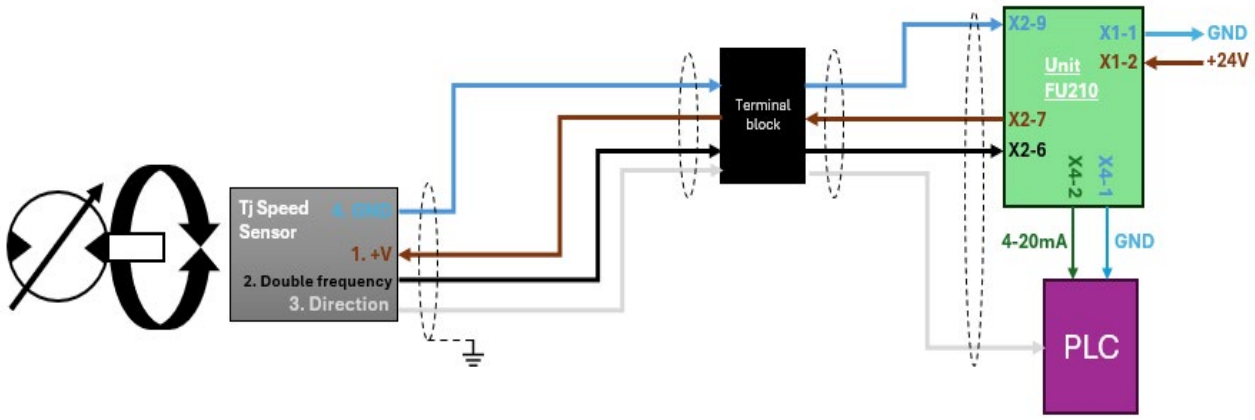

2-12 Special Features (cont)

Ts readout option

The Ts option consists of the Tj speed sensor together with the optional FU210 output module.

The addition of the FU210 module provides a software configured single channel tachometer and relay with a /4-20mA analogue current output which comes pre-programmed with the motor.

For more in-depth information please contact KPM UK.

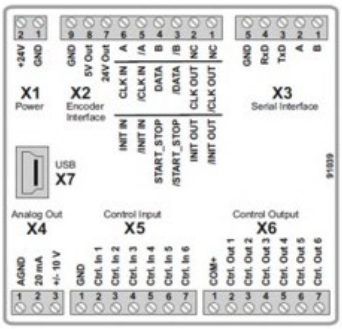

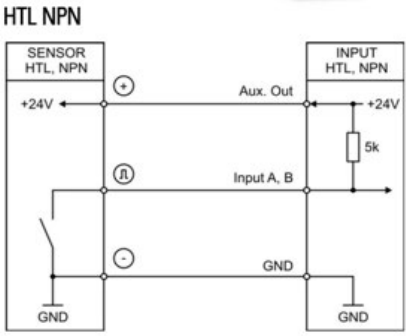

Installation Details

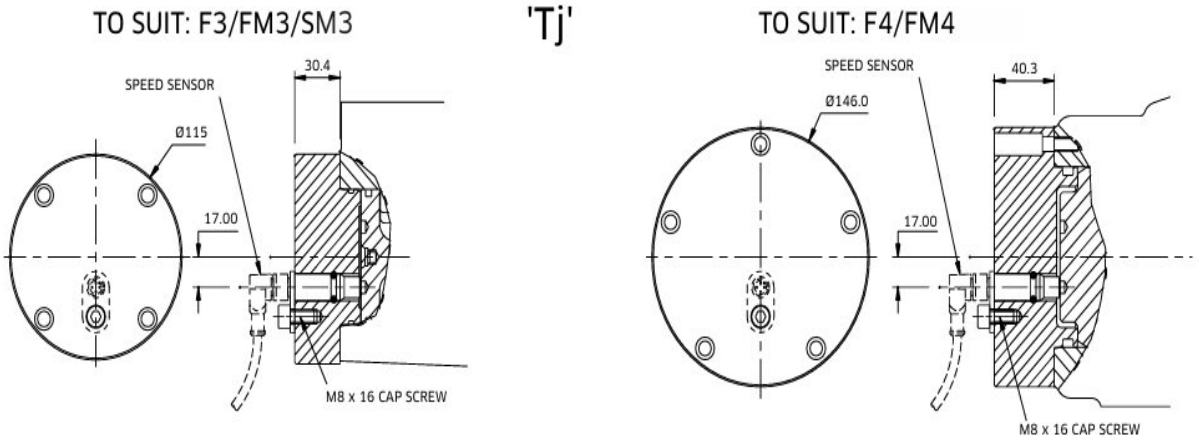

3 Dimensions

3-1 HPB060/080

'P', 'S' & 'Z' Shafts

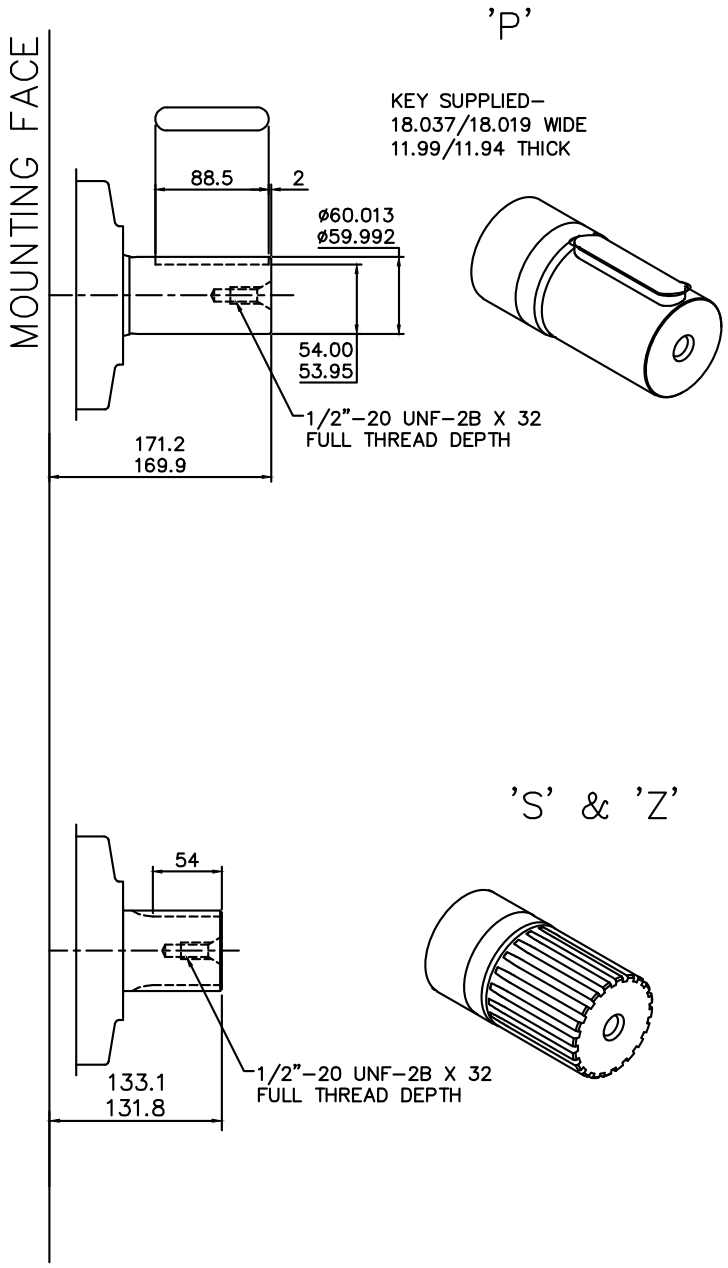

SPLINE DATA

'S'	
TO BS 3550 (ANSI B92.1 CLASS 5)	
FLAT ROOT SIDE FIT, CLASS 1	
PRESSURE ANGLE	30°
NUMBER OF TEETH	14
PITCH	6/12
MAJOR DIAMETER	62.553/62.425
FORM DIAMETER	55.052
MINOR DIAMETER	54.084/53.525
PIN DIAMETER	8.128
DIAMETER OVER PINS	71.593/71.544

'Z'
DIN 5480 W70 x 3 x 30 x 22 x 7h

3-1 HPB060/080 (cont)

'T' & 'Q' Shafts

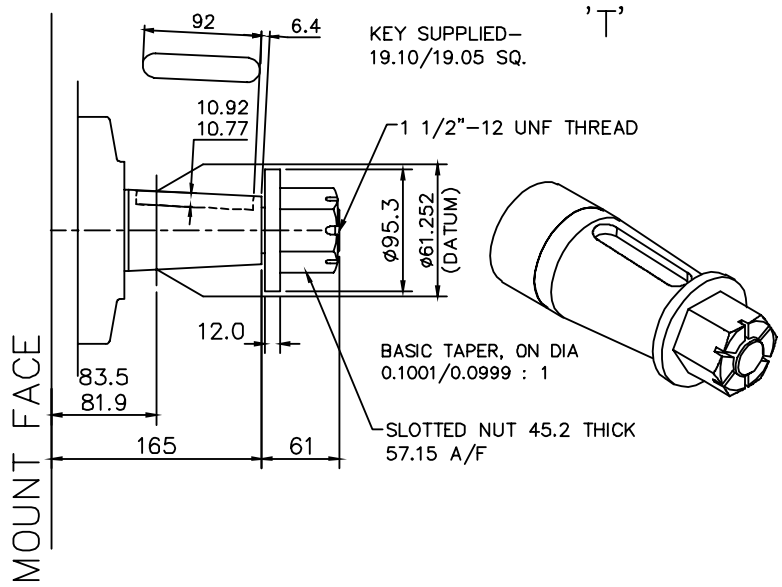

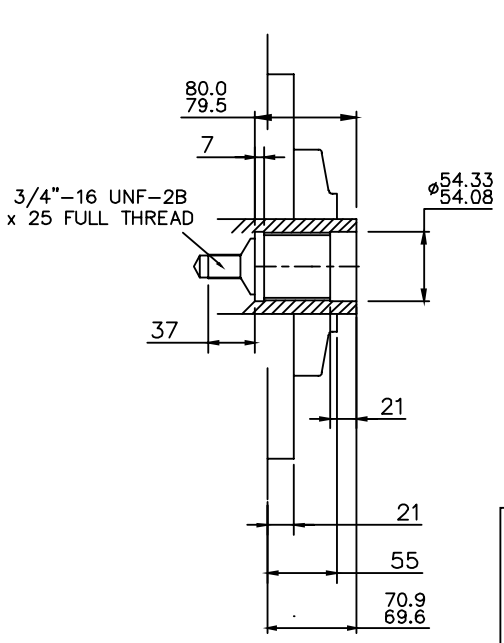

SPLINE DATA	
TO BS 3550	
FLAT ROOT SIDE FIT	
PRESSURE ANGLE	30°
NUMBER OF TEETH	24
PITCH	12/24
MAJOR DIAMETER	53.25/52.92
MINOR DIAMETER	48.81/48.68
FORM DIAMETER	52.49
PIN DIAMETER	3.66 flatted to 3.56
DIMENSION BETWEEN PINS	45.63/45.55

3-1 HPB060/080 (cont)

'SM3' Valve Housing

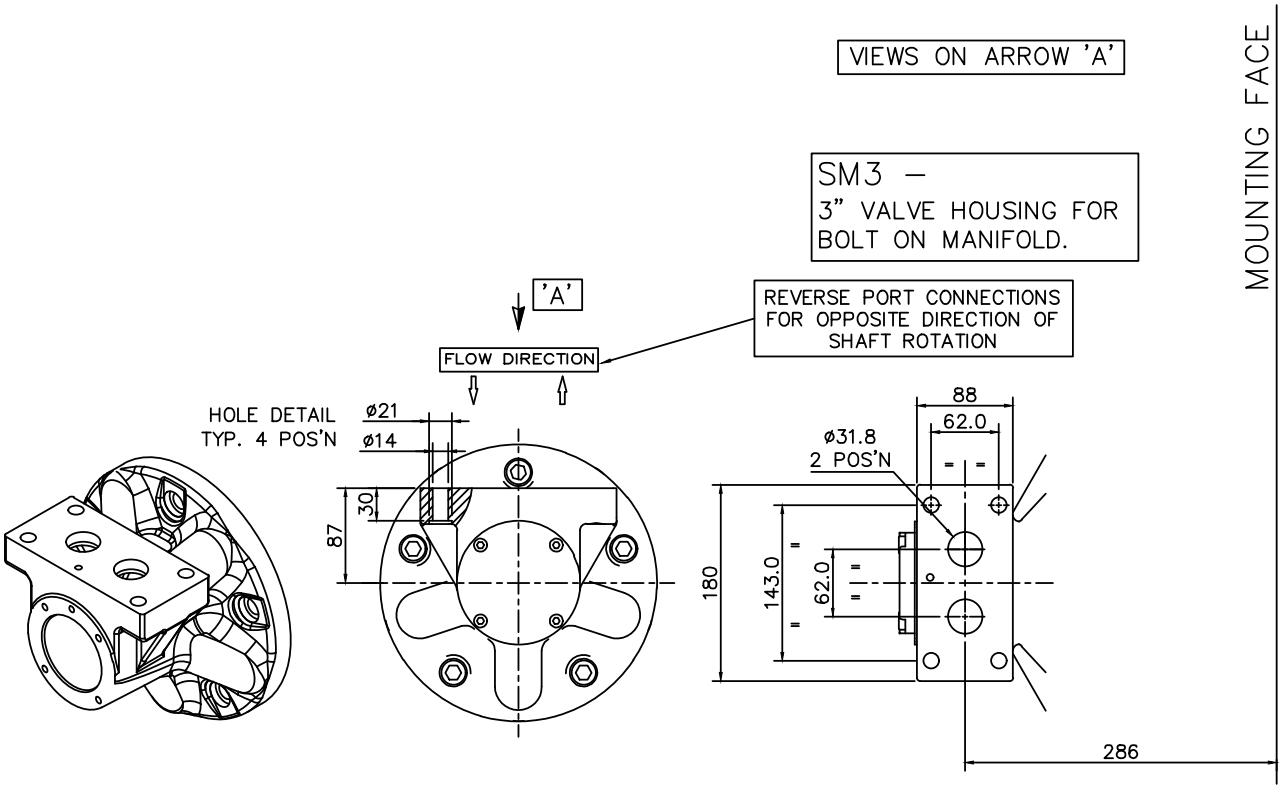

3-1 HPB060/080 (cont)

'F3' & 'FM3' Valve Housings

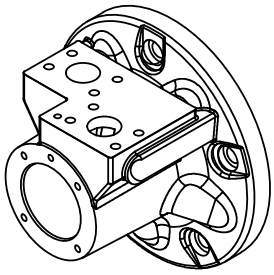

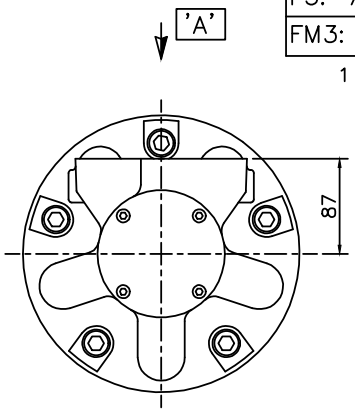

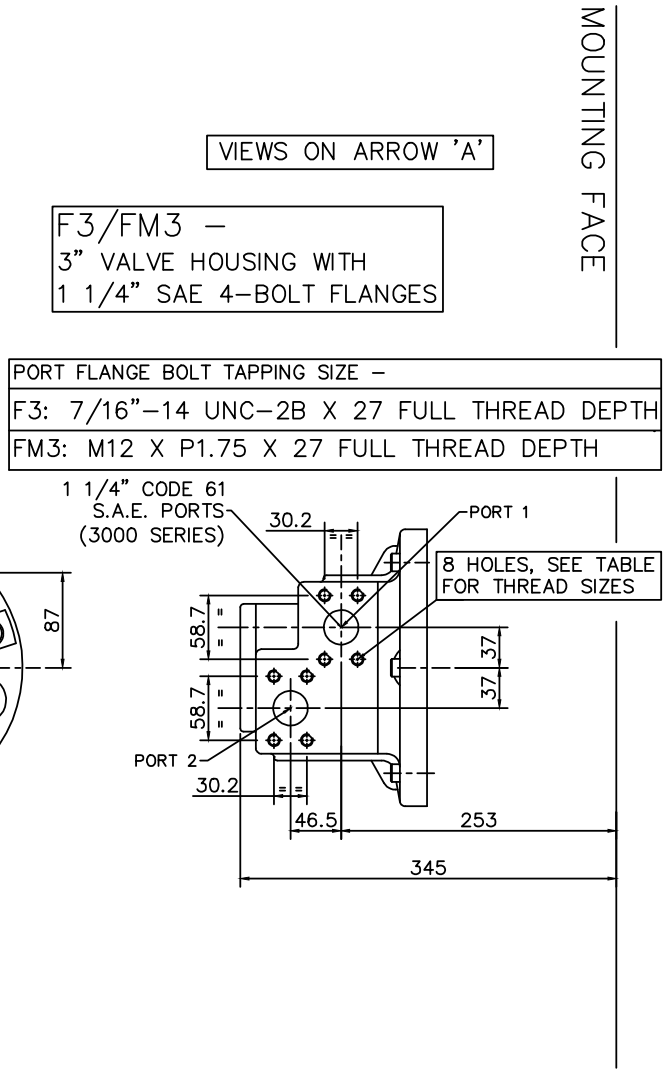

3-1 HPB060/080 (cont)

Installation

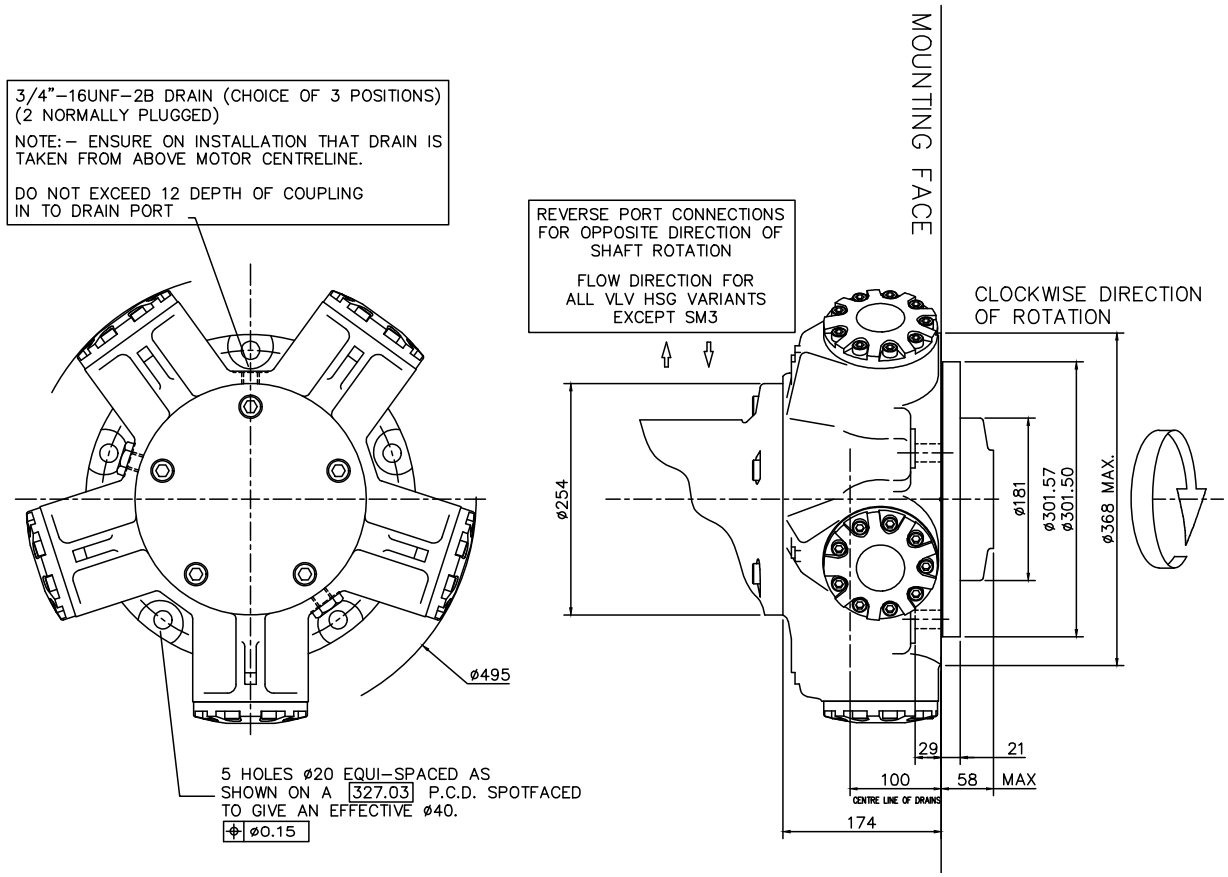

3-2 HPB100

'P', 'S' & 'Z' Shafts

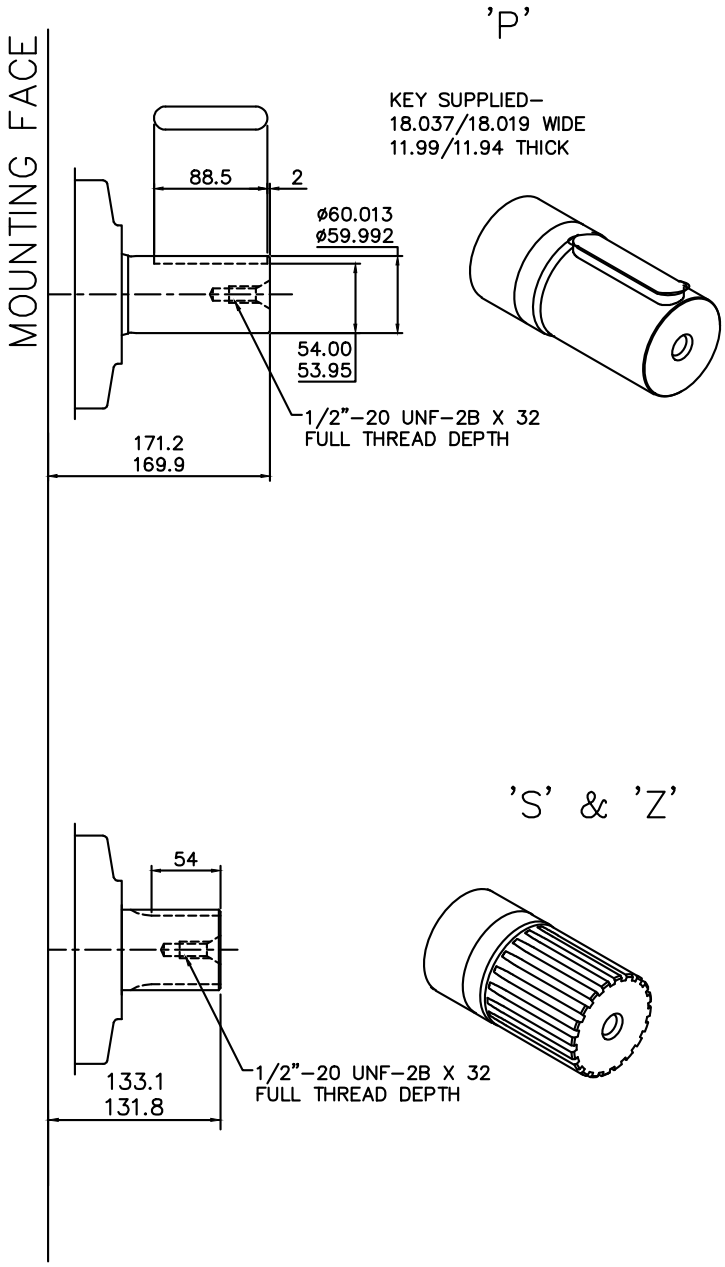

SPLINE DATA

'S'	
TO BS 3550 (ANSI B92.1 CLASS 5)	
FLAT ROOT SIDE FIT, CLASS 1	
PRESSURE ANGLE	30°
NUMBER OF TEETH	14
PITCH	6/12
MAJOR DIAMETER	62.553/62.425
FORM DIAMETER	55.052
MINOR DIAMETER	54.084/53.525
PIN DIAMETER	8.128
DIAMETER OVER PINS	71.593/71.544

'Z'
DIN 5480 W70 x 3 x 30 x 22 x 7h

3-2 HPB100 (cont)

'T' & 'Q' Shafts

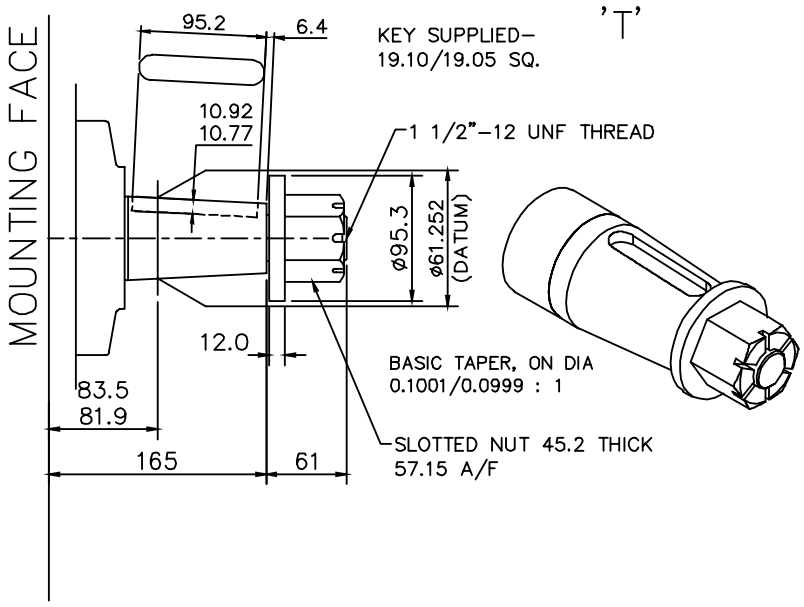

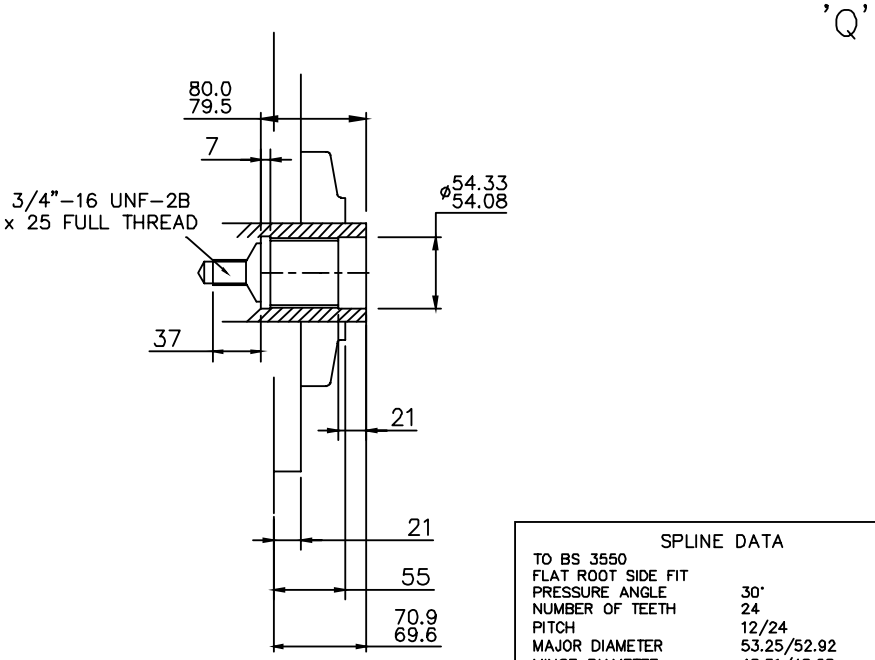

SPLINE DATA	
TO BS 3550	
FLAT ROOT SIDE FIT	
PRESSURE ANGLE	30°
NUMBER OF TEETH	24
PITCH	12/24
MAJOR DIAMETER	53.25/52.92
MINOR DIAMETER	48.81/48.68
FORM DIAMETER	52.49
PIN DIAMETER	3.66 flatted to 3.56
DIMENSION BETWEEN PINS	45.63/45.55

3-2 HPB100 (cont)

'SM3' Valve Housing

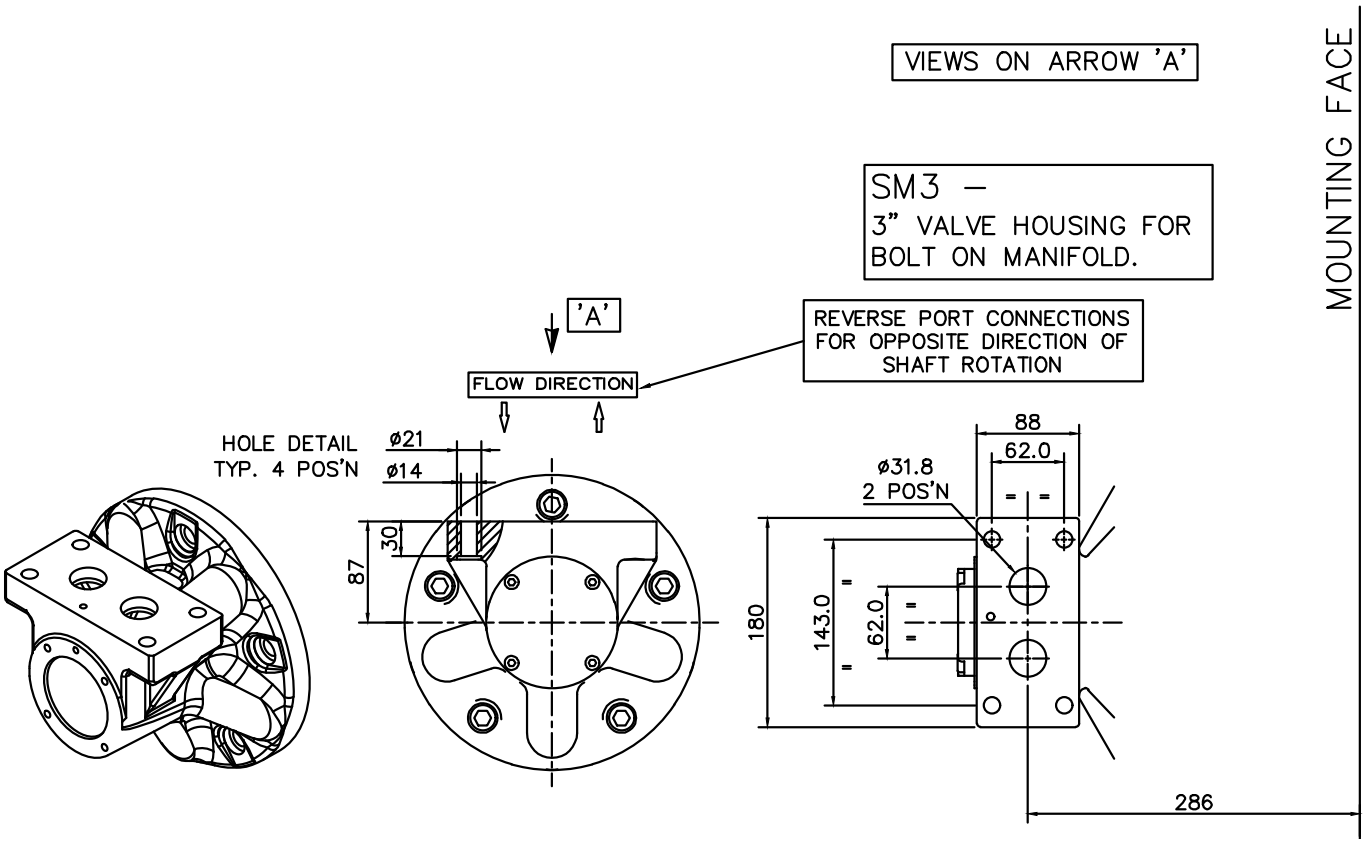

3-2 HPB100 (cont)

'F3' & 'FM3' Valve Housings

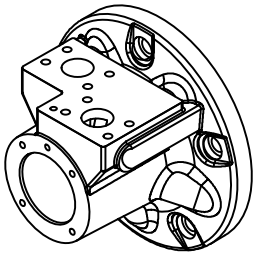

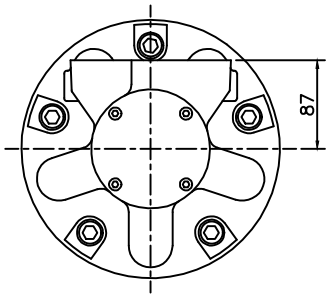

VIEWS ON ARROW 'A'

F3/FM3 –
3" VALVE HOUSING WITH
1 1/4" SAE 4–BOLT FLANGES

PORT FLANGE BOLT TAPPING SIZE –
F3: 7/16"–14 UNC–2B X 27 FULL THREAD DEPTH
FM3: M12 X P1.75 X 27 FULL THREAD DEPTH

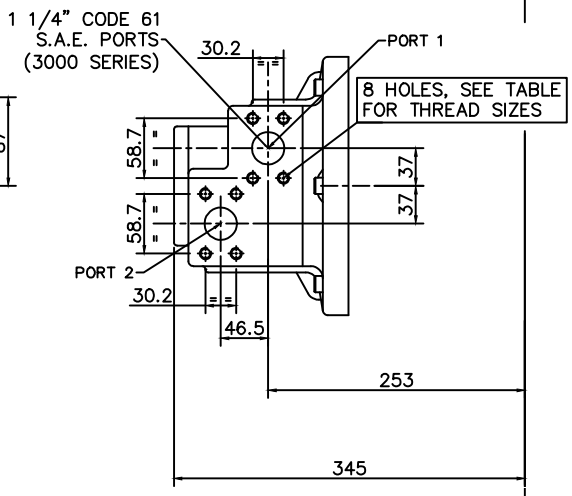

'F4' & 'FM4' Valve Housings

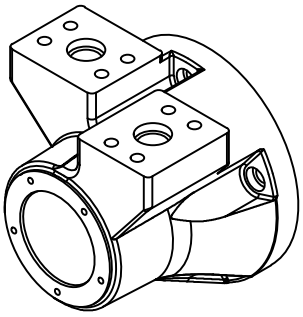

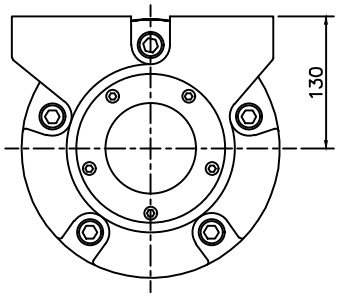

F4/FM4 –
4" VALVE HOUSING WITH
1 1/2" SAE 4–BOLT FLANGES

PORT FLANGE BOLT TAPPING SIZE –
F4: 5/8"–11 UNC–2B X 35 FULL THREAD DEPTH
FM4: M16 X P2 X 35 FULL THREAD DEPTH

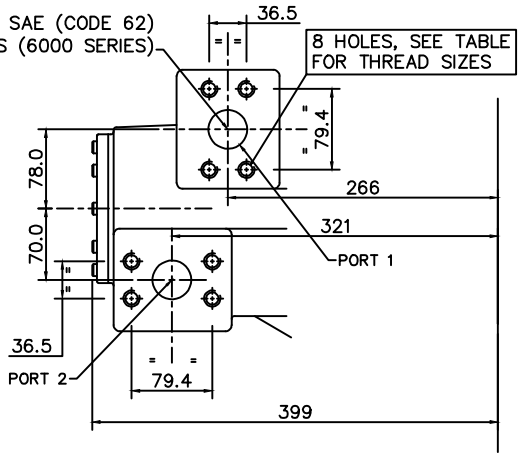

3-2 HPB100 (cont)

Installation

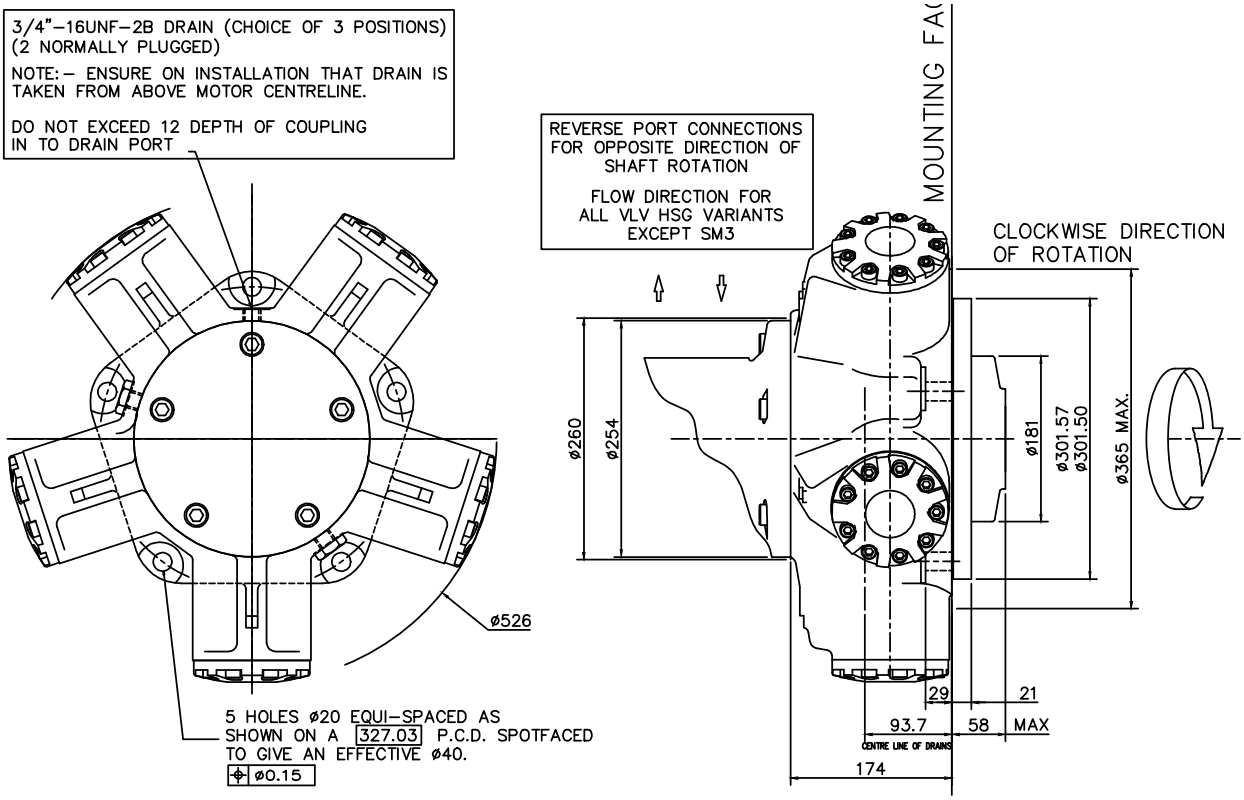

3-3 HPB125

HPB125 - 'P1', 'S3', 'S4' & 'Z3' Shafts

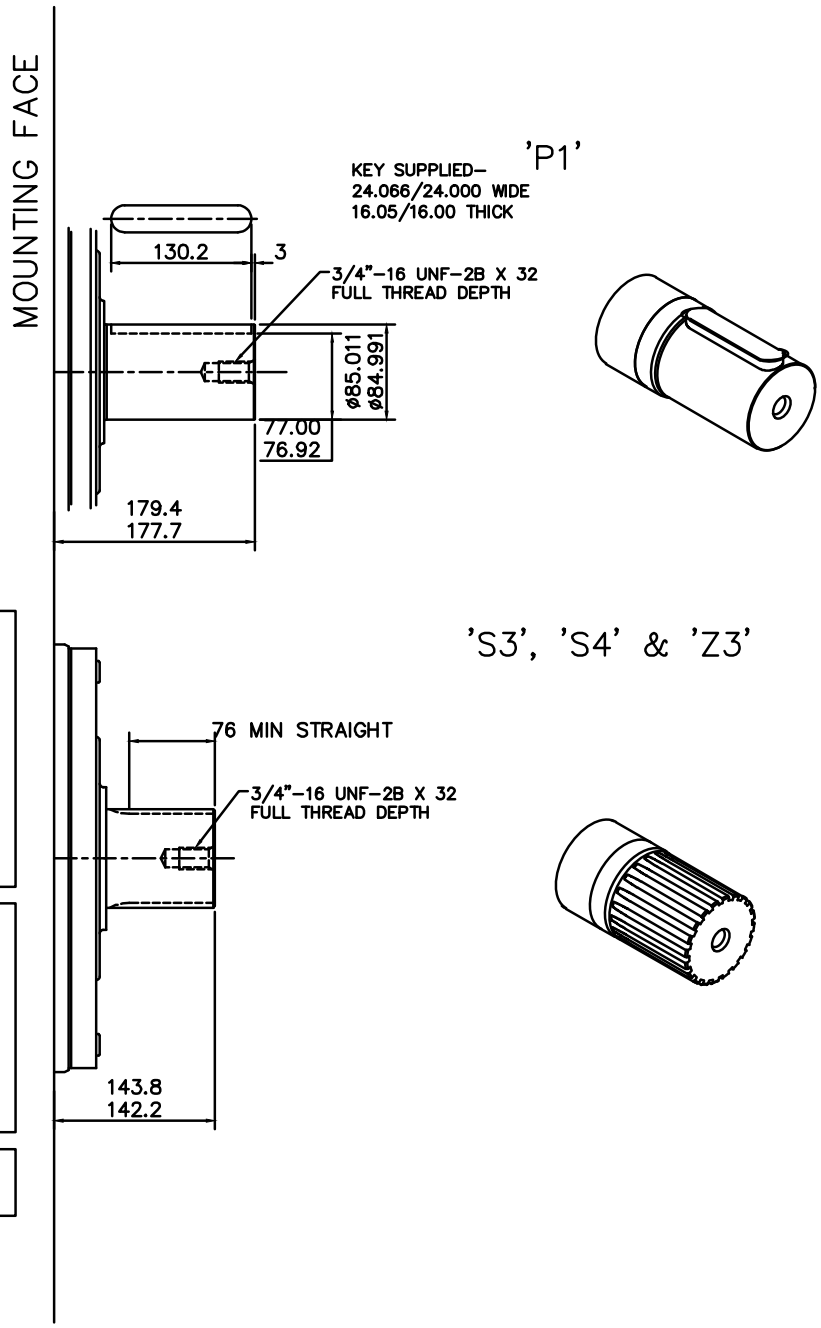

SPLINE DATA

'S3'	
TO BS 3550 (ANSI B92.1, CLASS 5)	
FLAT ROOT SIDE FIT, CLASS 1	
PRESSURE ANGLE	30°
NUMBER OF TEETH	20
PITCH	6/12
MAJOR DIAMETER	87.953/87.825
FORM DIAMETER	80.264
MINOR DIAMETER	79.485/78.925
PIN DIAMETER	8.128
DIAMETER OVER PINS	97.084/97.030

'S4'	
PRESSURE ANGLE	20°
NUMBER OF TEETH	16
PITCH	5/10
MAJOR DIAMETER	86.360/86.233
FORM DIAMETER	76.124
MINOR DIAMETER	74.93/72.39
PIN DIAMETER	8.636
DIAMETER OVER PINS	92.710/92.581

'Z3'
DIN 5480 W85 x 3 x 27 x 7h

3-3 HPB125 (cont)

HPB125 - 'T' & 'Q' Shafts

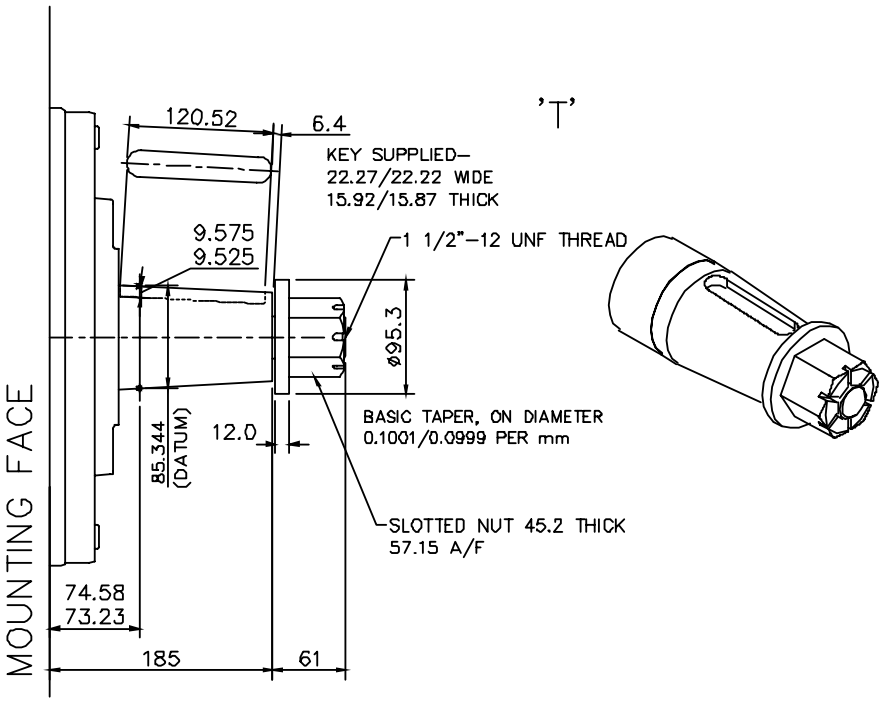

SPLINE DATA	
BS3550 : FLAT ROOT SIDE FIT	
NUMBER OF TEETH	34
PITCH	12/24
MAJOR DIAMETER	74.41/74.08
MINOR DIAMETER	69.98/69.85
PIN DIAMETER	3.66 flatted to 3.56
DIMENSION BETWEEN PINS	66.81/66.74

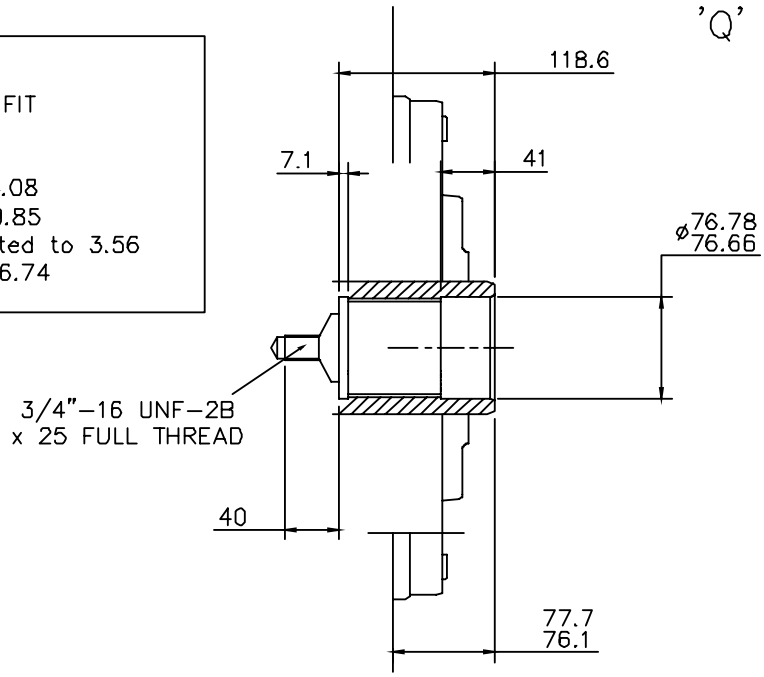

3-3 HPB125 (cont)

HPB125 - 'P2' Shafts

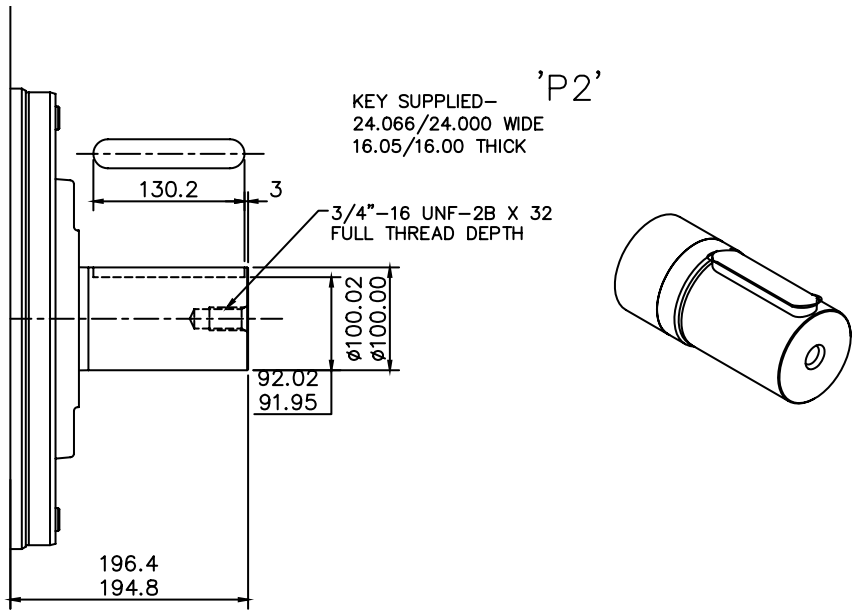

3-3 HPB125 (cont)

HPB125 - 'S5' & 'Z5' Shafts

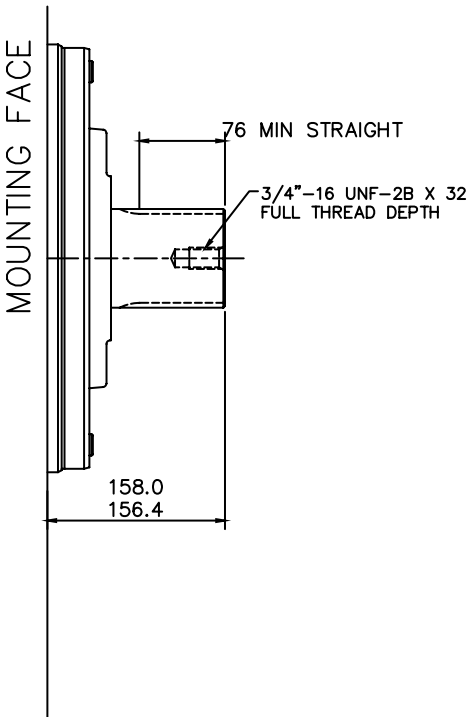

'S5' & 'Z5'

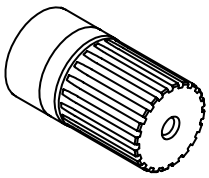

SPLINE DATA

'S5'	
PRESSURE ANGLE	20°
NUMBER OF TEETH	23
PITCH	6/12
MAJOR DIAMETER	100.652/100.526
FORM DIAMETER	92.939
MINOR DIAMETER	92.184/91.626
PIN DIAMETER	8.128
DIAMETER OVER PINS	109.573/109.517

'Z5'
DIN 5480 W100 x 4 x 24 x 7h

3-3 HPB125 (cont)

'SM3' Valve Housing

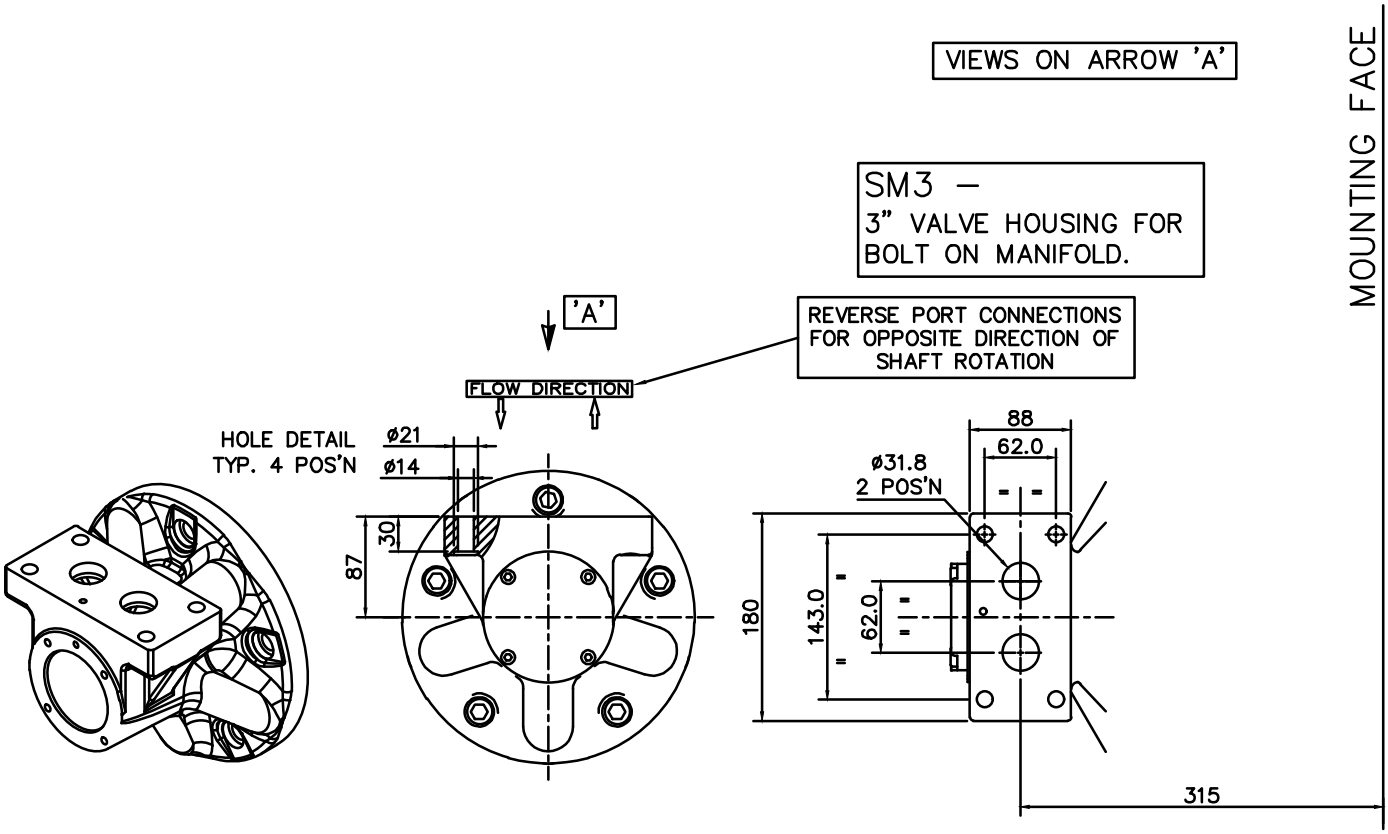

3-3 HPB125 (cont)

'F3' & 'FM3' Valve Housings

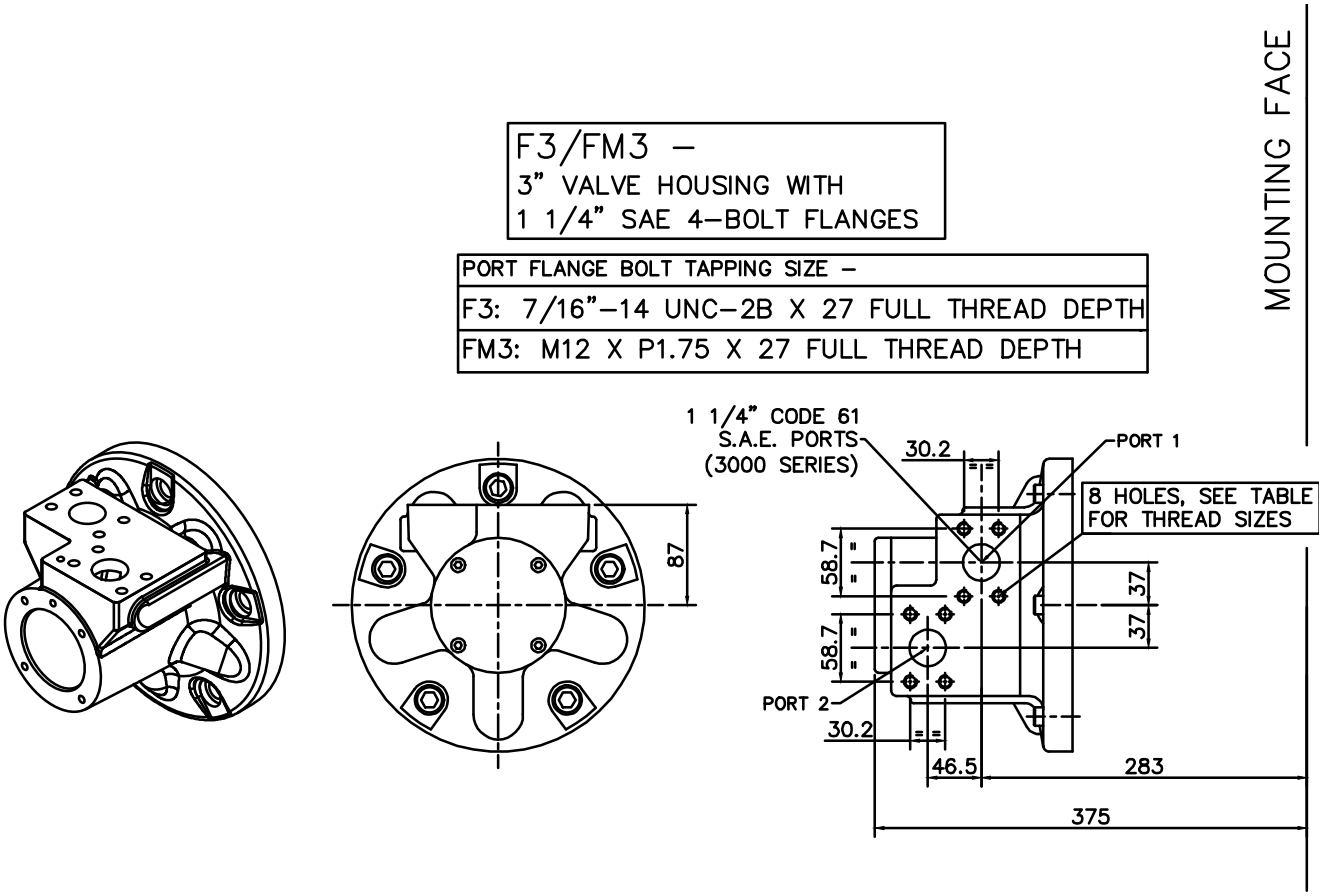

3-3 HPB125 (cont)

'F4' & 'FM4' Valve Housings

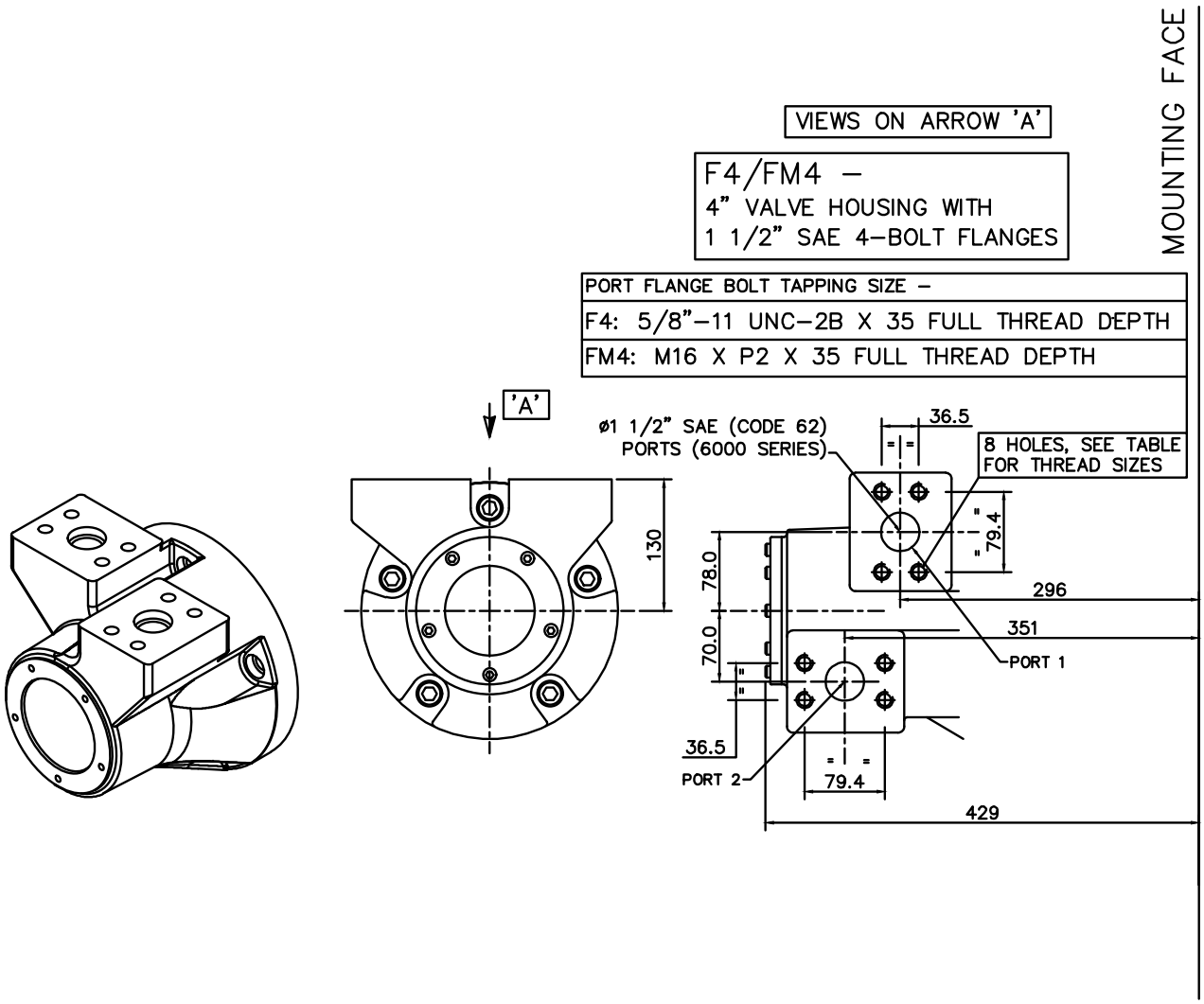

3-3 HPB125 (cont)

Installation

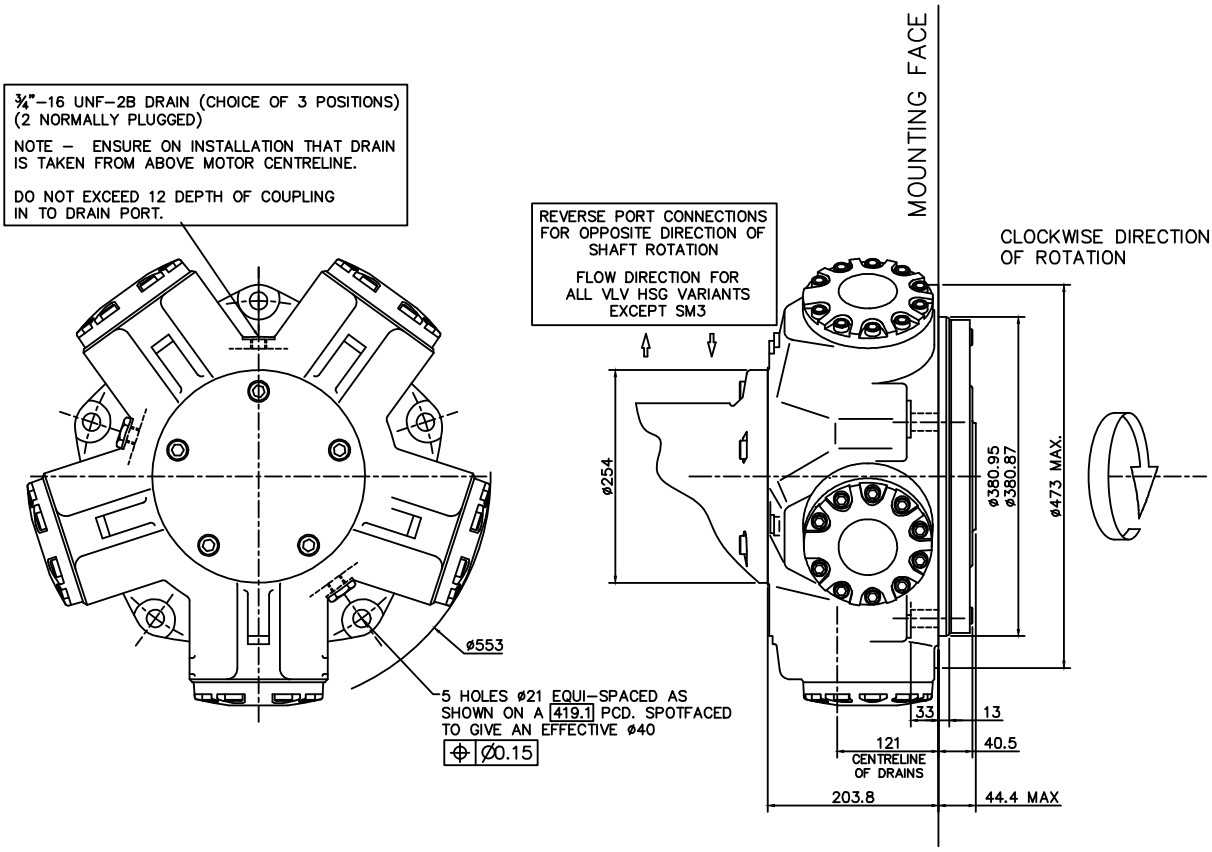

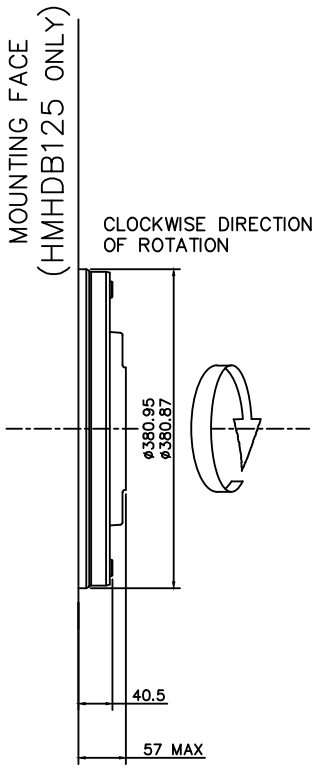

3-4 HPB150/200

HPB150/200 - 'P1', 'S3', 'S4' & 'Z3' Shafts

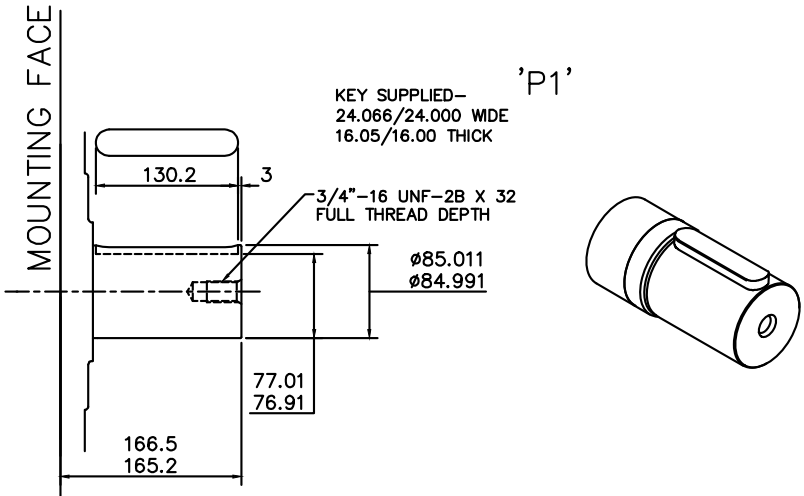

SPLINE DATA

'S3'	
TO BS 3550 (ANSI B92.1, CLASS 5)	
FLAT ROOT SIDE FIT, CLASS 1	
PRESSURE ANGLE	30°
NUMBER OF TEETH	20
PITCH	6/12
MAJOR DIAMETER	87.953/87.825
FORM DIAMETER	80.264
MINOR DIAMETER	79.485/78.925
PIN DIAMETER	8.128
DIAMETER OVER PINS	97.084/97.030

'S4'	
PRESSURE ANGLE	20°
NUMBER OF TEETH	16
PITCH	5/10
MAJOR DIAMETER	86.360/86.233
FORM DIAMETER	76.124
MINOR DIAMETER	74.93/72.39
PIN DIAMETER	8.636
DIAMETER OVER PINS	92.710/92.581

'Z3'
DIN 5480 W85 x 3 x 27 x 7h

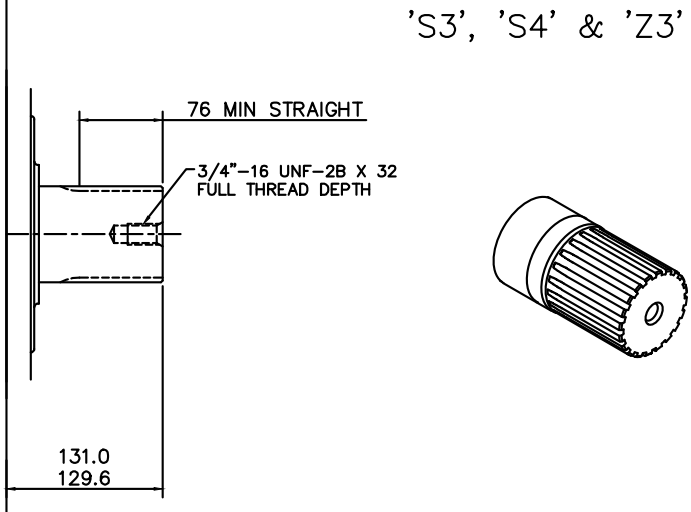

3-4 HPB150/200 (cont)

HPB150/200 - 'T' Shaft

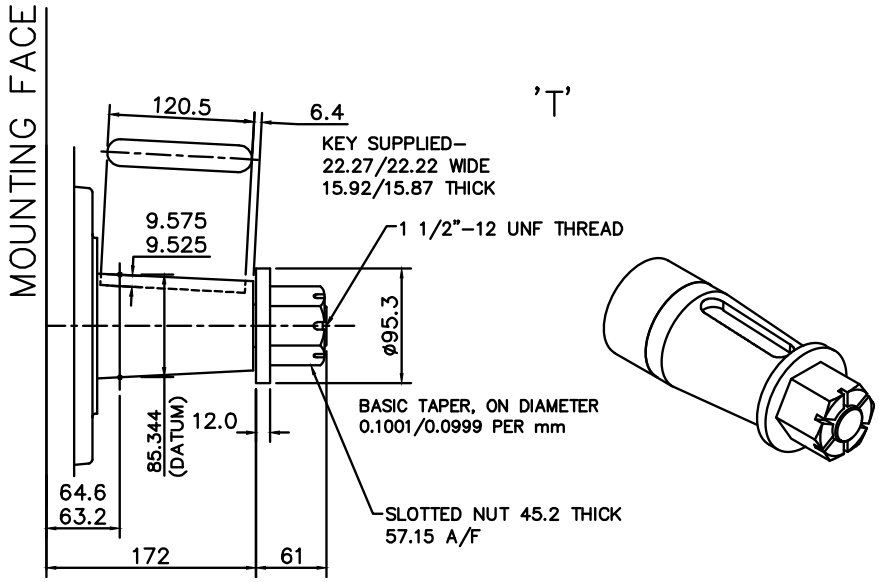

3-4 HPB150/200 (cont)

HPB150/200 - 'P2', 'S5' & 'Z5' Shafts

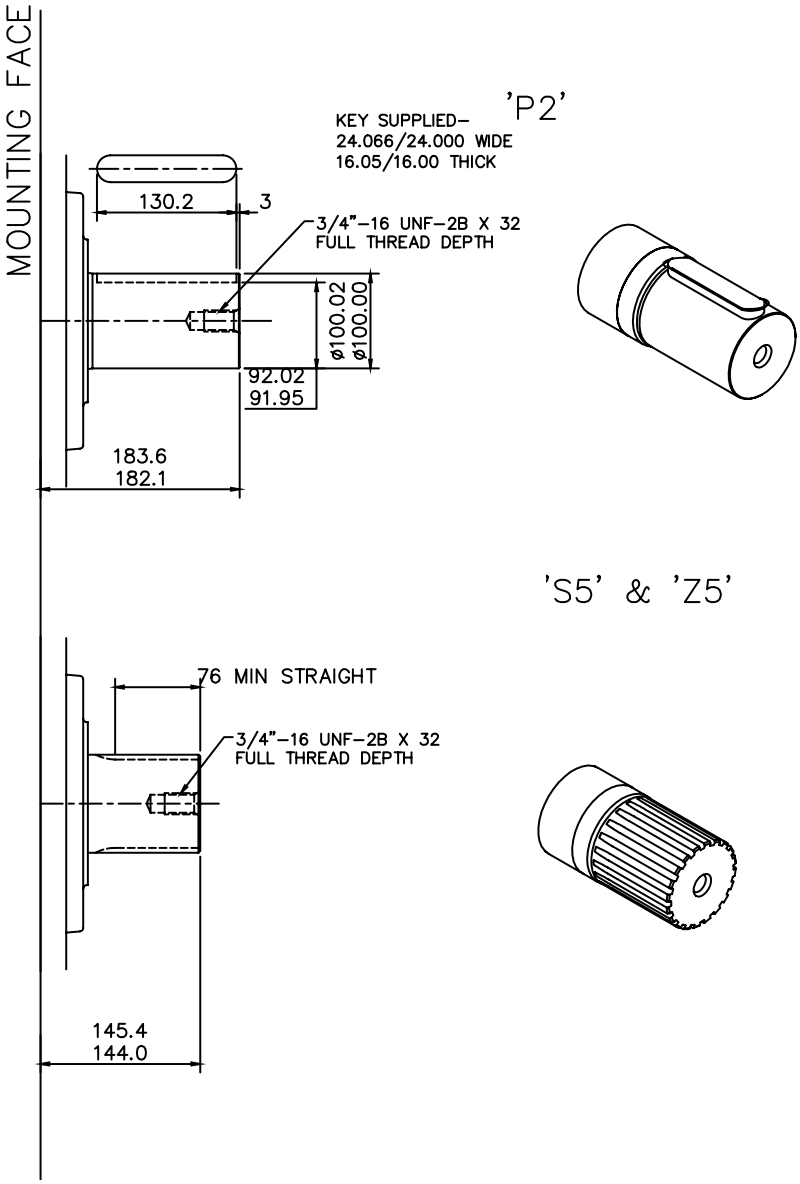

SPLINE DATA

'S5'	
PRESSURE ANGLE	30°
NUMBER OF TEETH	23
PITCH	6/12
MAJOR DIAMETER	100.652/100.526
FORM DIAMETER	92.939
MINOR DIAMETER	92.184/91.626
PIN DIAMETER	8.128
DIAMETER OVER PINS	109.573/109.517

'Z5'
DIN 5480 W100 x 4 x 24 x 7h

3-4 HPB150/200 (cont)

HPB150/200 - 'Q' Shafts

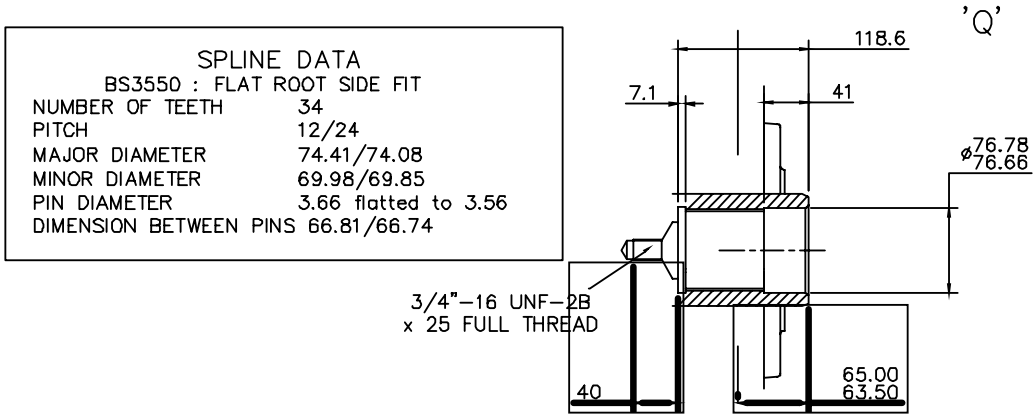

'SM3' Valve Housing

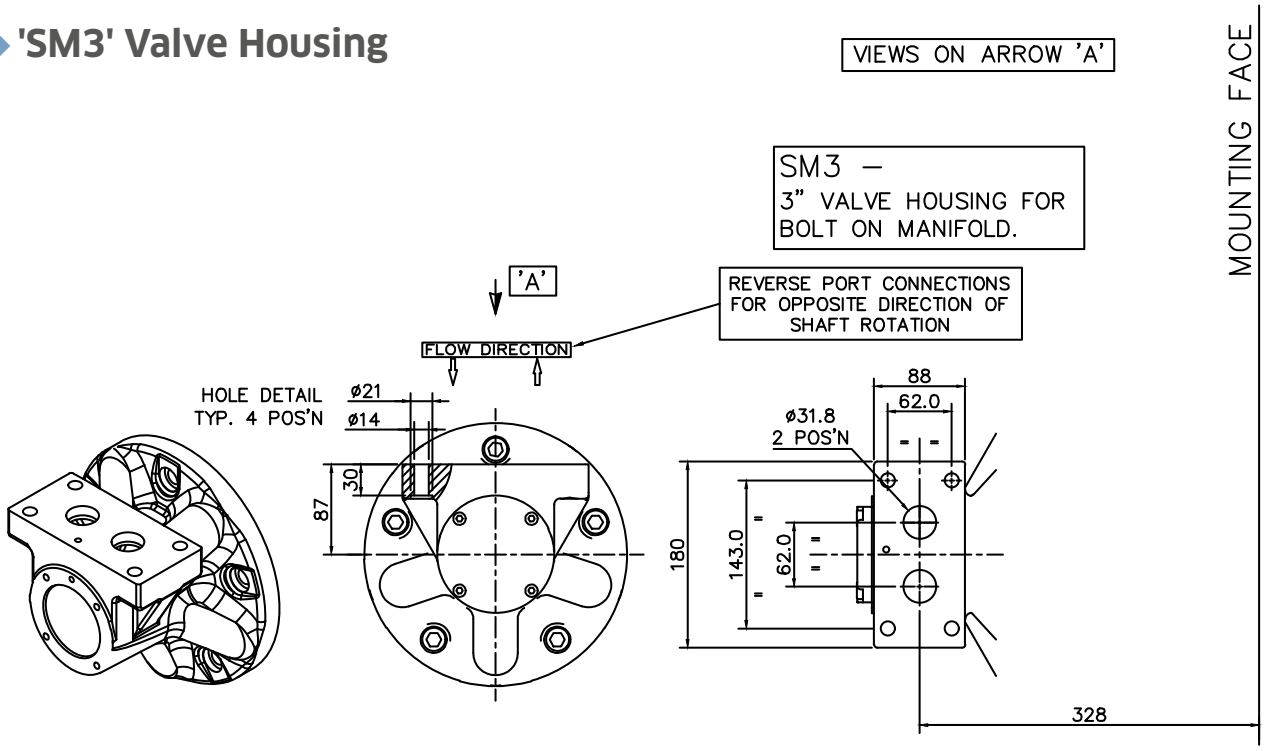

3-4 HPB150/200 (cont)

'F3' & 'FM3' Valve Housings

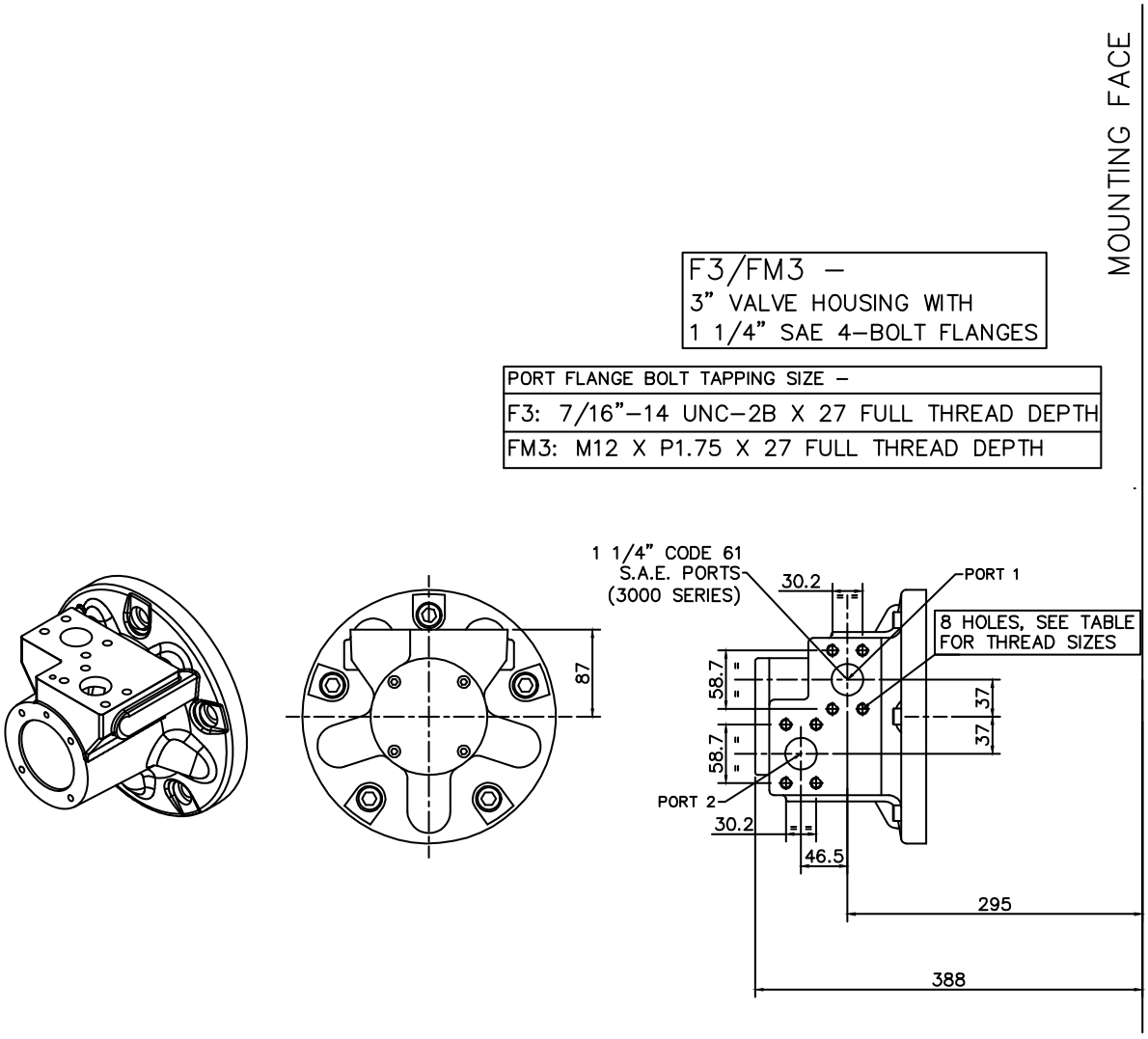

3-4 HPB150/200 (cont)

'F4' & 'FM4' Valve Housings

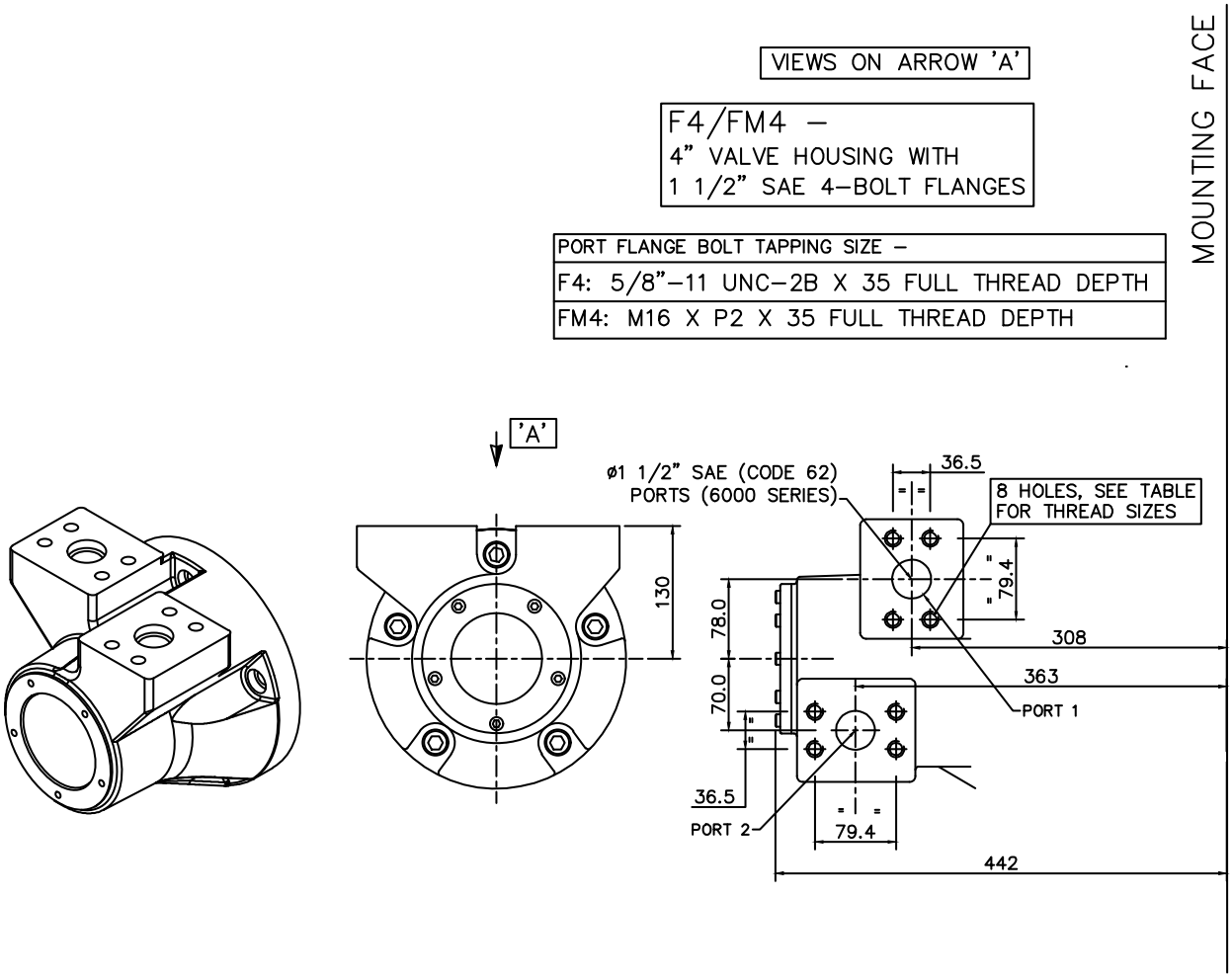

3-4 HPB150/200 (cont)

Installation

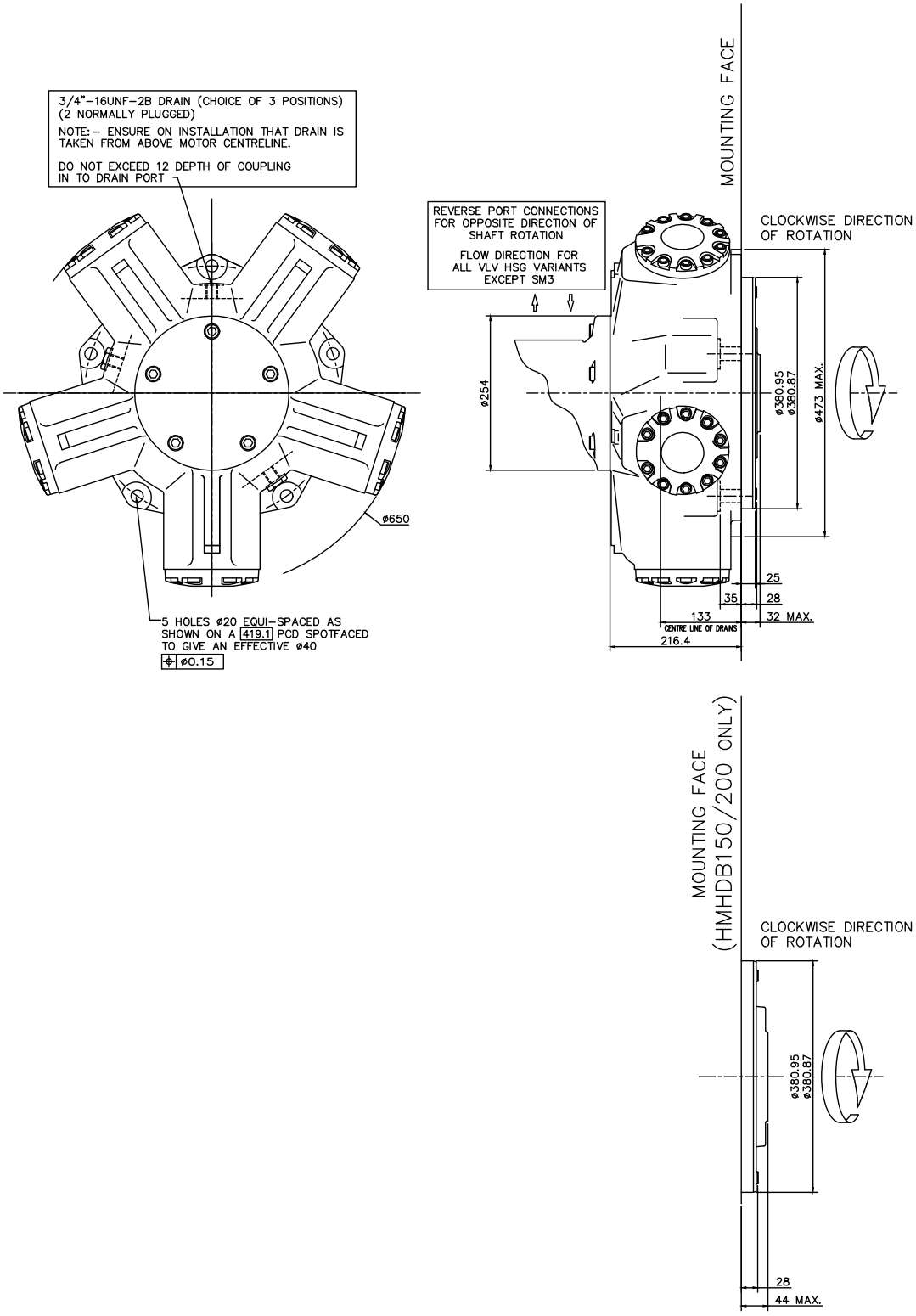

3-5 HPB270

HPB270 - 'P1', 'S3' & 'Z' Shafts

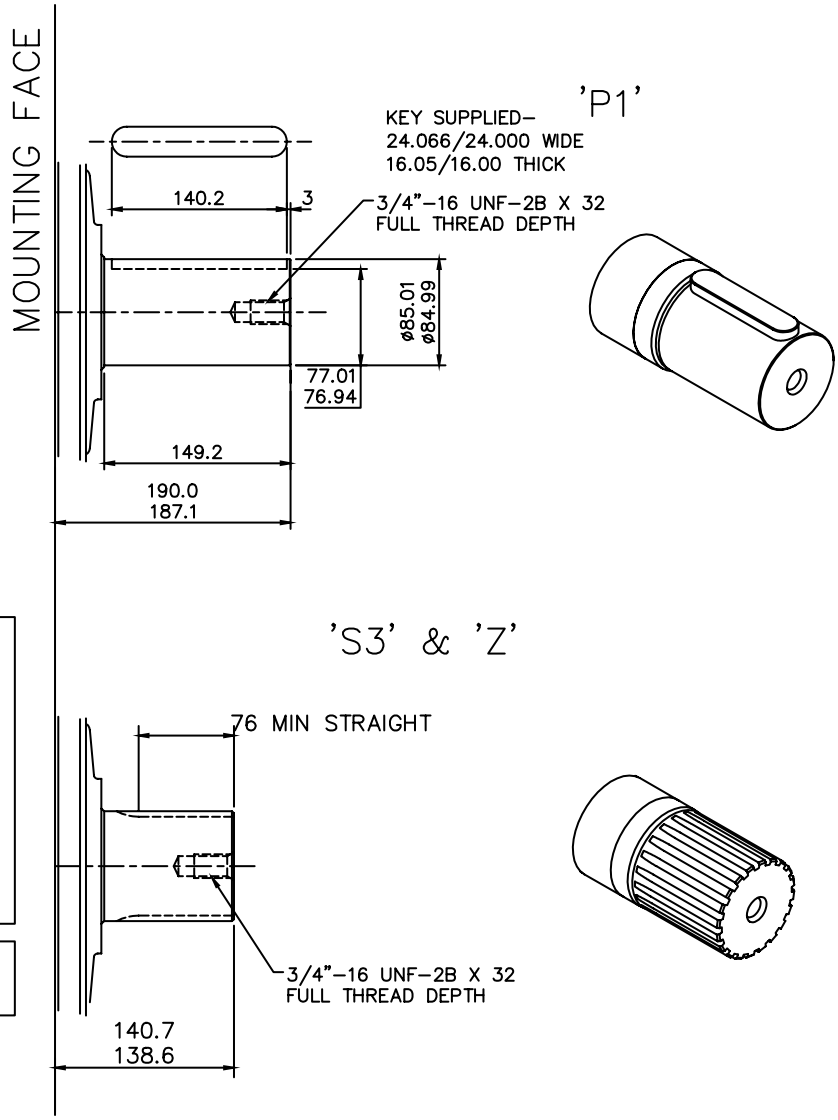

SPLINE DATA

'S3'	
TO BS 3550 (ANSI B92.1, CLASS 5)	
FLAT ROOT SIDE FIT, CLASS 1	
PRESSURE ANGLE	30°
NUMBER OF TEETH	20
PITCH	6/12
MAJOR DIAMETER	87.953/87.825
FORM DIAMETER	80.264
MINOR DIAMETER	79.485/78.925
PIN DIAMETER	8.128
DIAMETER OVER PINS	97.084/97.030

'Z'
DIN 5480 W100 x 4 x 24 x 7h

3-5 HPB270 (cont)

HPB270 - 'T' & 'Q' Shaft

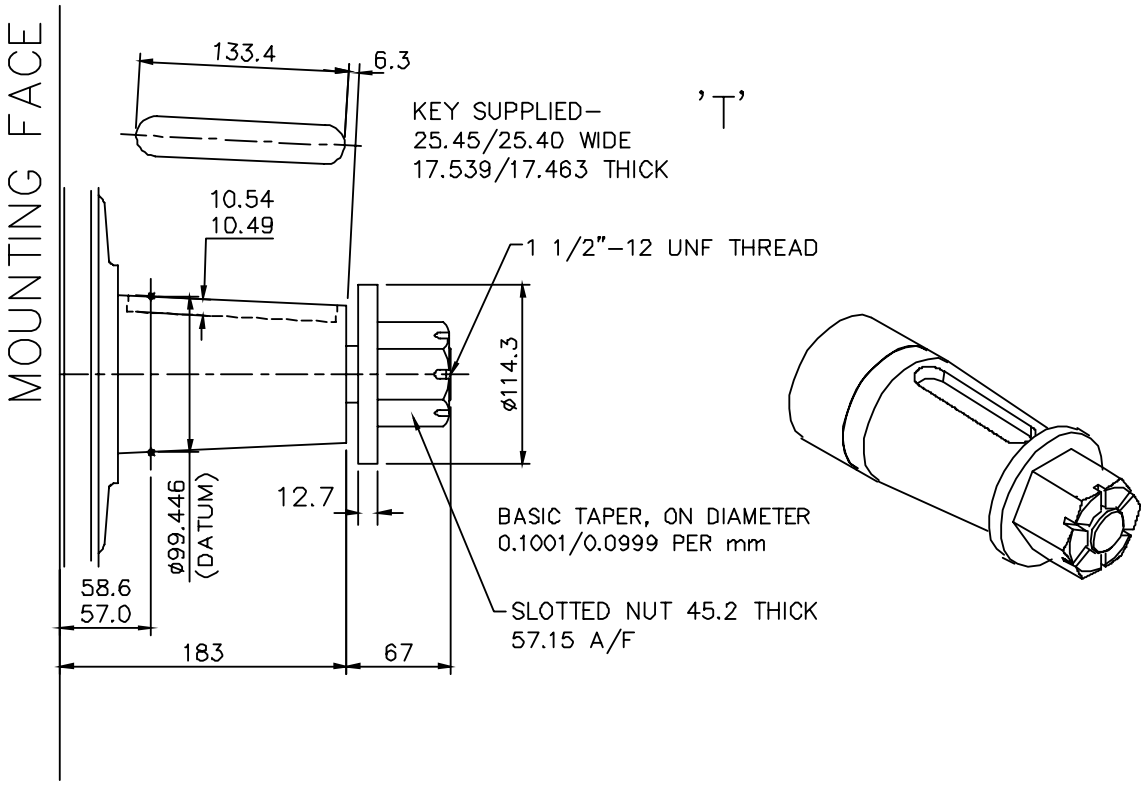

SPLINE DATA	
BS3550 : FLAT ROOT SIDE FIT	
NUMBER OF TEETH	34
PITCH	12/24
MAJOR DIAMETER	74.41/74.08
MINOR DIAMETER	69.98/69.85
PIN DIAMETER	3.66 flatted to 3.56
DIMENSION BETWEEN PINS	66.81/66.74

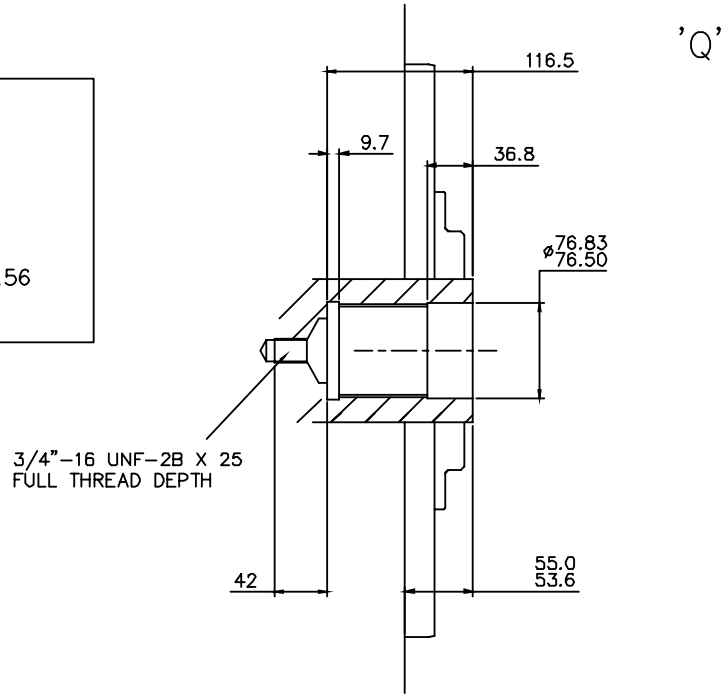

3-5 HPB270 (cont)

HPB270 - 'P2' & 'S5' Shafts

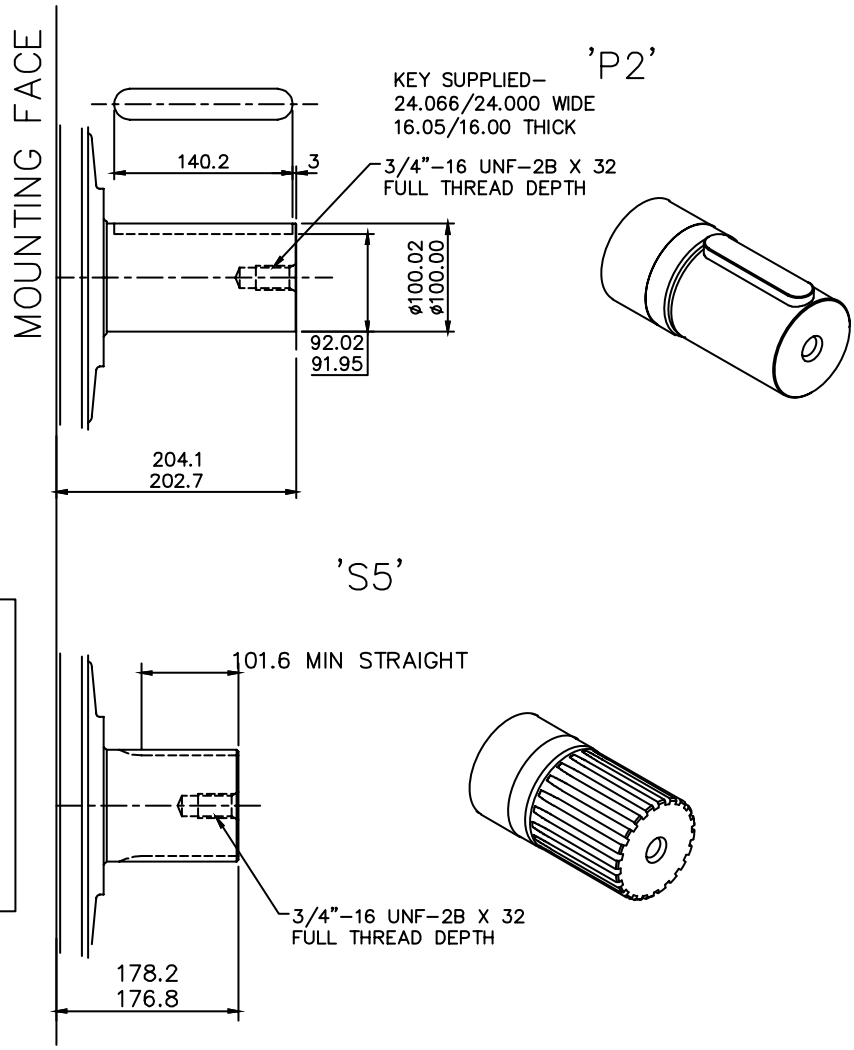

SPLINE DATA

'S3'	
TO BS 3550 (ANSI B92.1, CLASS 5)	
FLAT ROOT SIDE FIT, CLASS 1	
PRESSURE ANGLE	30°
NUMBER OF TEETH	23
PITCH	6/12
MAJOR DIAMETER	100.653/100.526
FORM DIAMETER	92.939
MINOR DIAMETER	92.184/91.625
PIN DIAMETER	8.128
DIAMETER OVER PINS	109.573/109.517

3-5 HPB270 (cont)

HPHDB270 - 'Z' Shaft

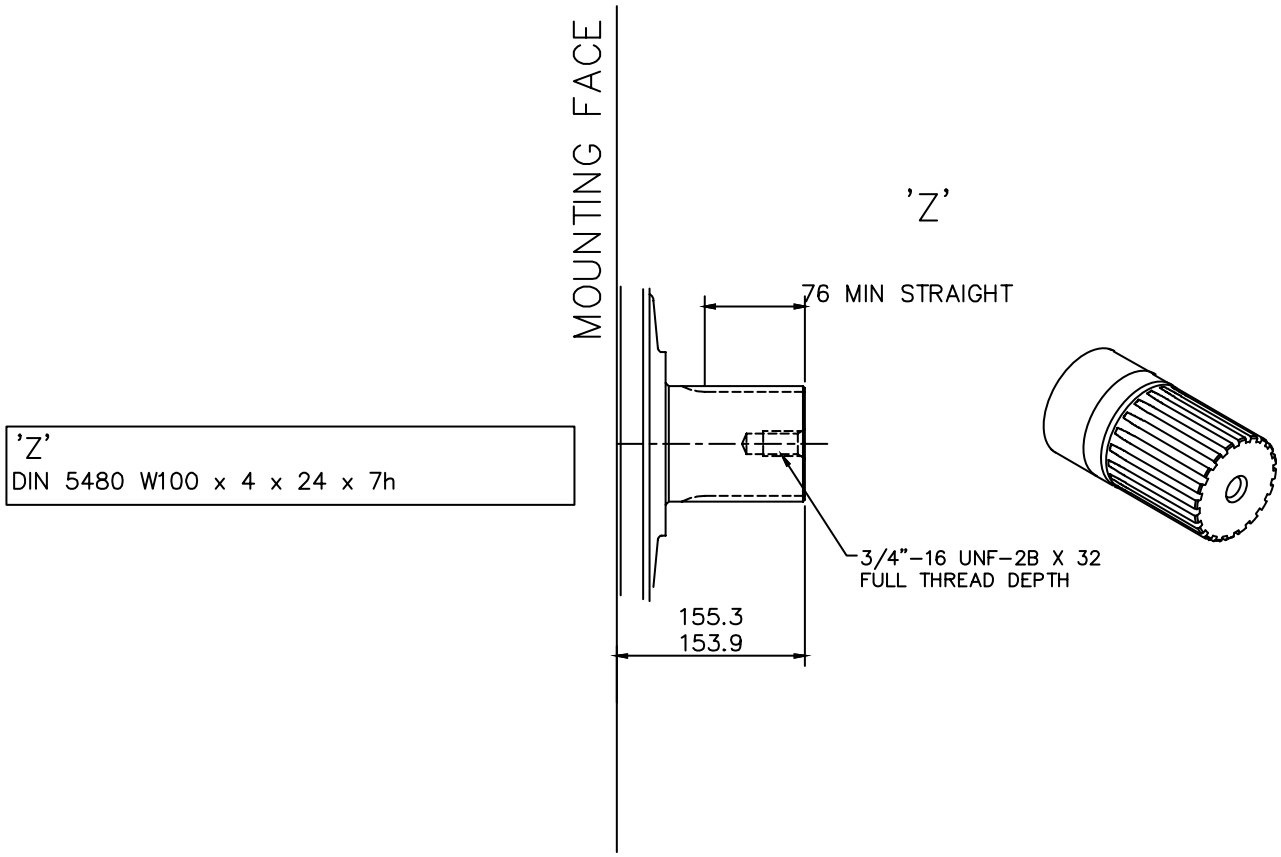

3-5 HPB270 (cont)

'F4' & 'FM4' Valve Housings

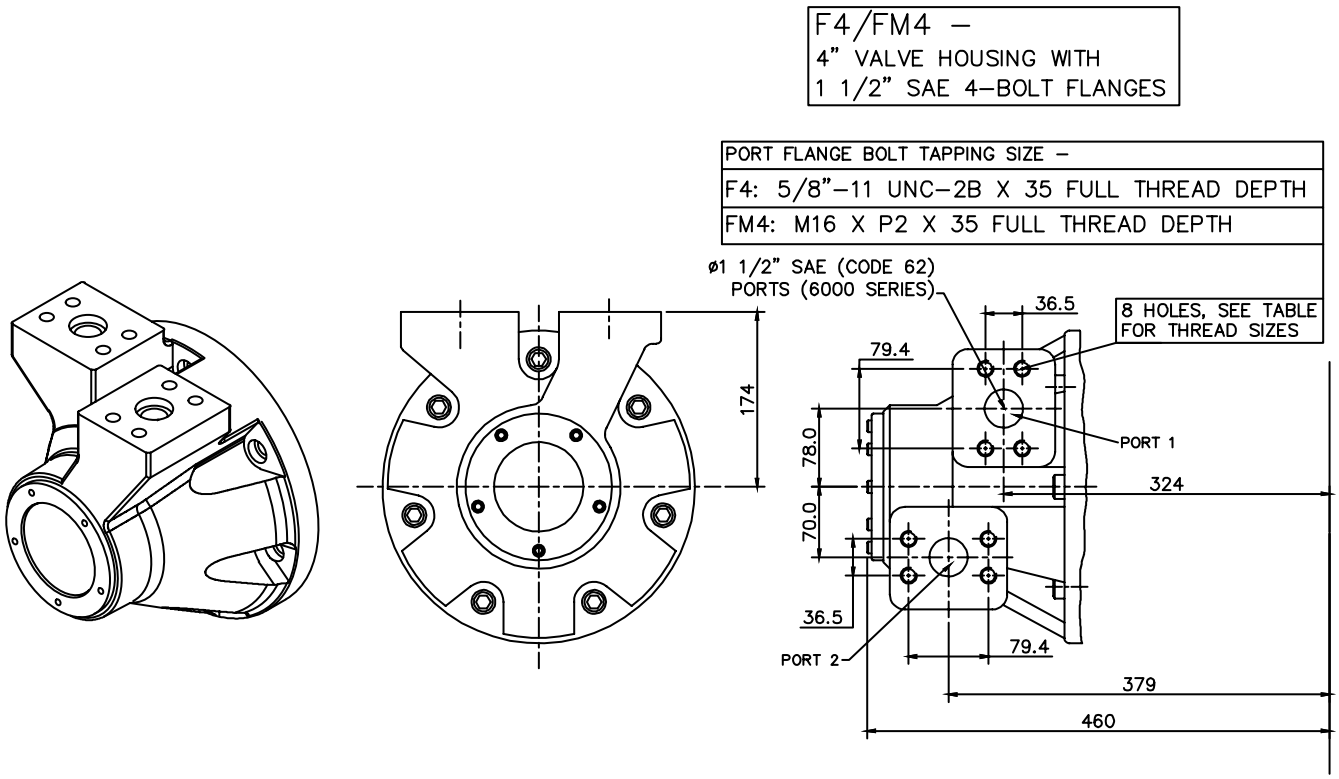

3-5 HPB270 (cont)

Installation

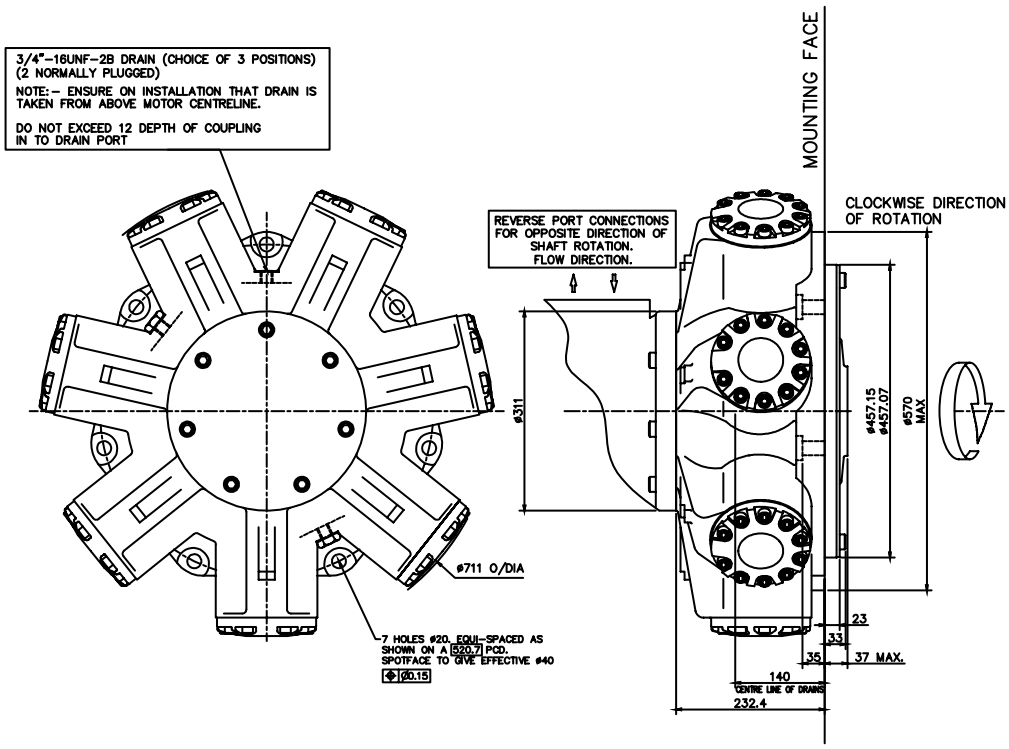

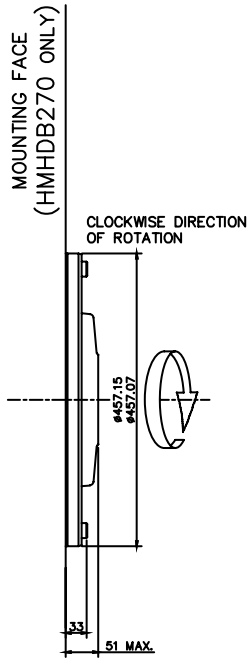

3-6 HPB325

HPB325 - 'P1', 'S3' & 'Z' Shafts

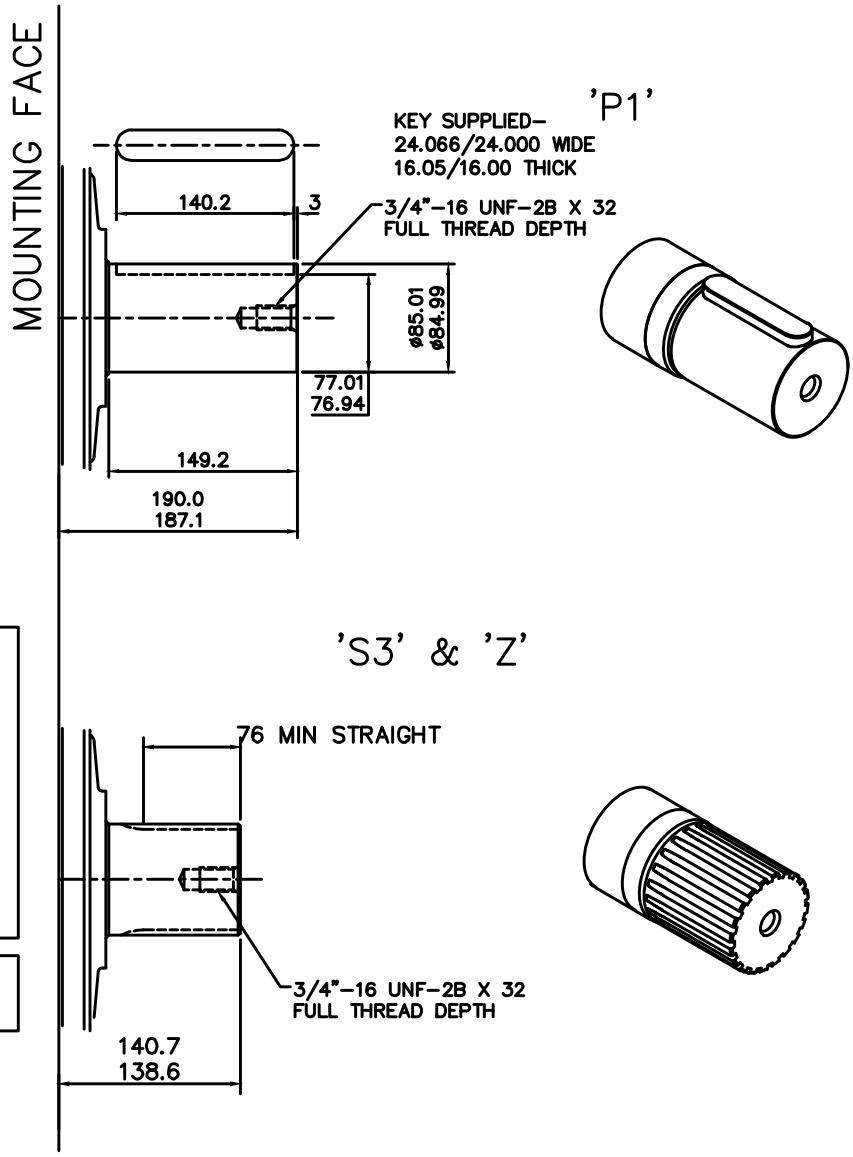

SPLINE DATA

'S3'	
TO BS 3550 (ANSI B92.1, CLASS 5)	
FLAT ROOT SIDE FIT, CLASS 1	
PRESSURE ANGLE	30°
NUMBER OF TEETH	20
PITCH	6/12
MAJOR DIAMETER	87.953/87.825
FORM DIAMETER	80.264
MINOR DIAMETER	79.485/78.925
PIN DIAMETER	8.128
DIAMETER OVER PINS	97.084/97.030

'Z'
DIN 5480 W100 x 4 x 24 x 7h

3-6 HPB325 (cont)

HPB325 - 'T' & 'Q' Shaft

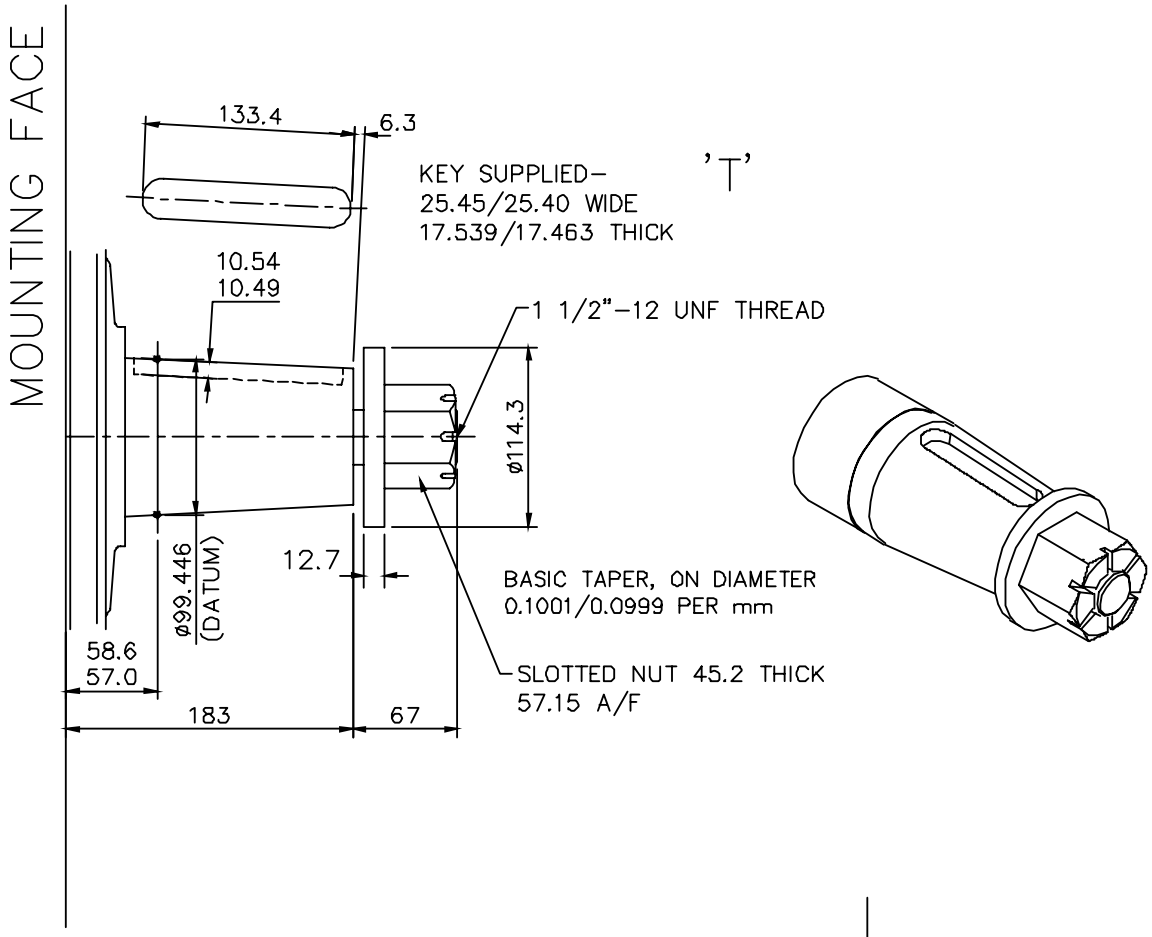

SPLINE DATA	
BS3550 : FLAT ROOT SIDE FIT	
NUMBER OF TEETH	34
PITCH	12/24
MAJOR DIAMETER	74.41/74.08
MINOR DIAMETER	69.98/69.85
PIN DIAMETER	3.66 flatted to 3.56
DIMENSION BETWEEN PINS	66.81/66.74

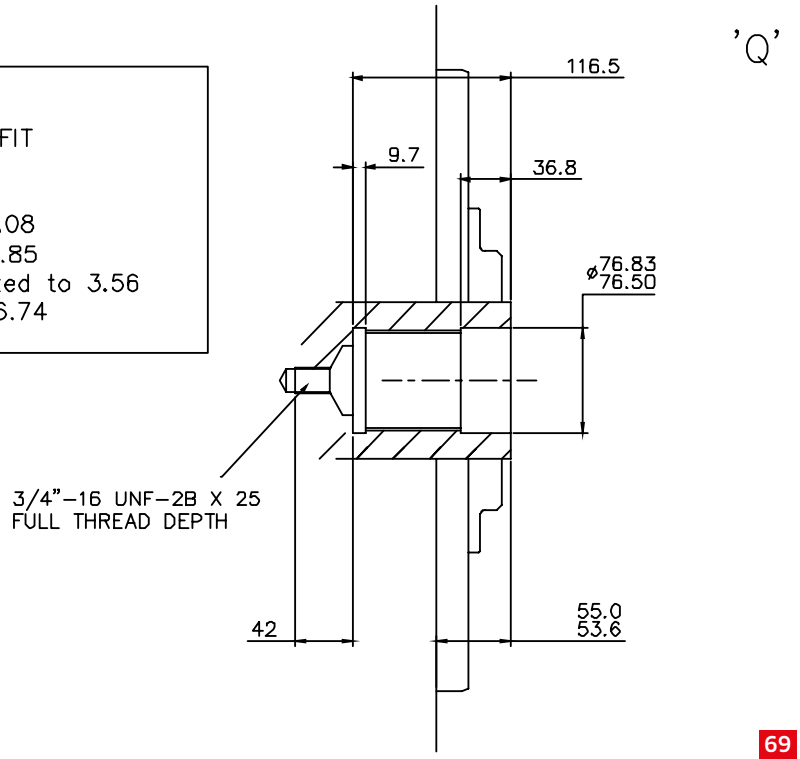

3-6 HPB325 (cont)

HPB325 - 'P2' & 'S5' Shafts

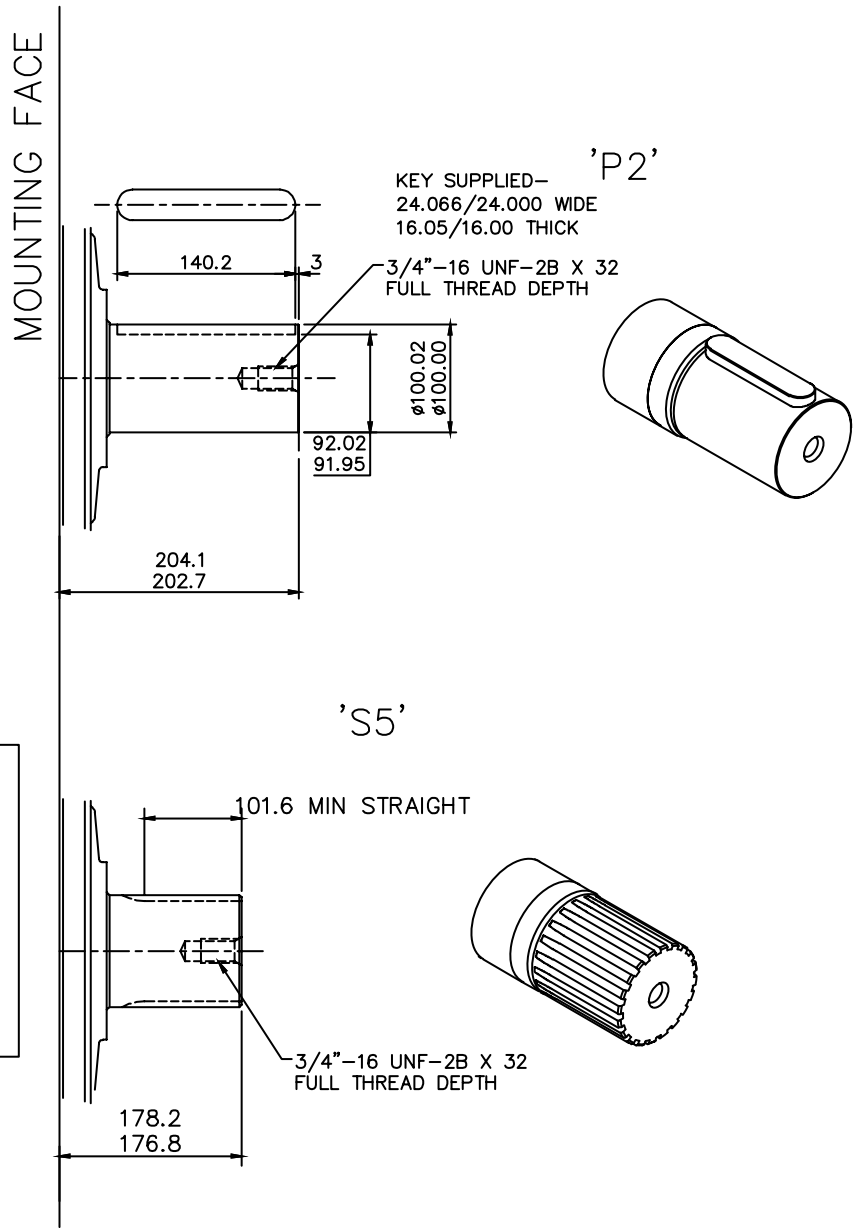

SPLINE DATA

'S3'	
TO BS 3550 (ANSI B92.1, CLASS 5)	
FLAT ROOT SIDE FIT, CLASS 1	
PRESSURE ANGLE	30°
NUMBER OF TEETH	23
PITCH	6/12
MAJOR DIAMETER	100.653/100.526
FORM DIAMETER	92.939
MINOR DIAMETER	92.184/91.625
PIN DIAMETER	8.128
DIAMETER OVER PINS	109.573/109.517

3-6 HPB325 (cont)

HPHDB325 - 'Z' Shaft

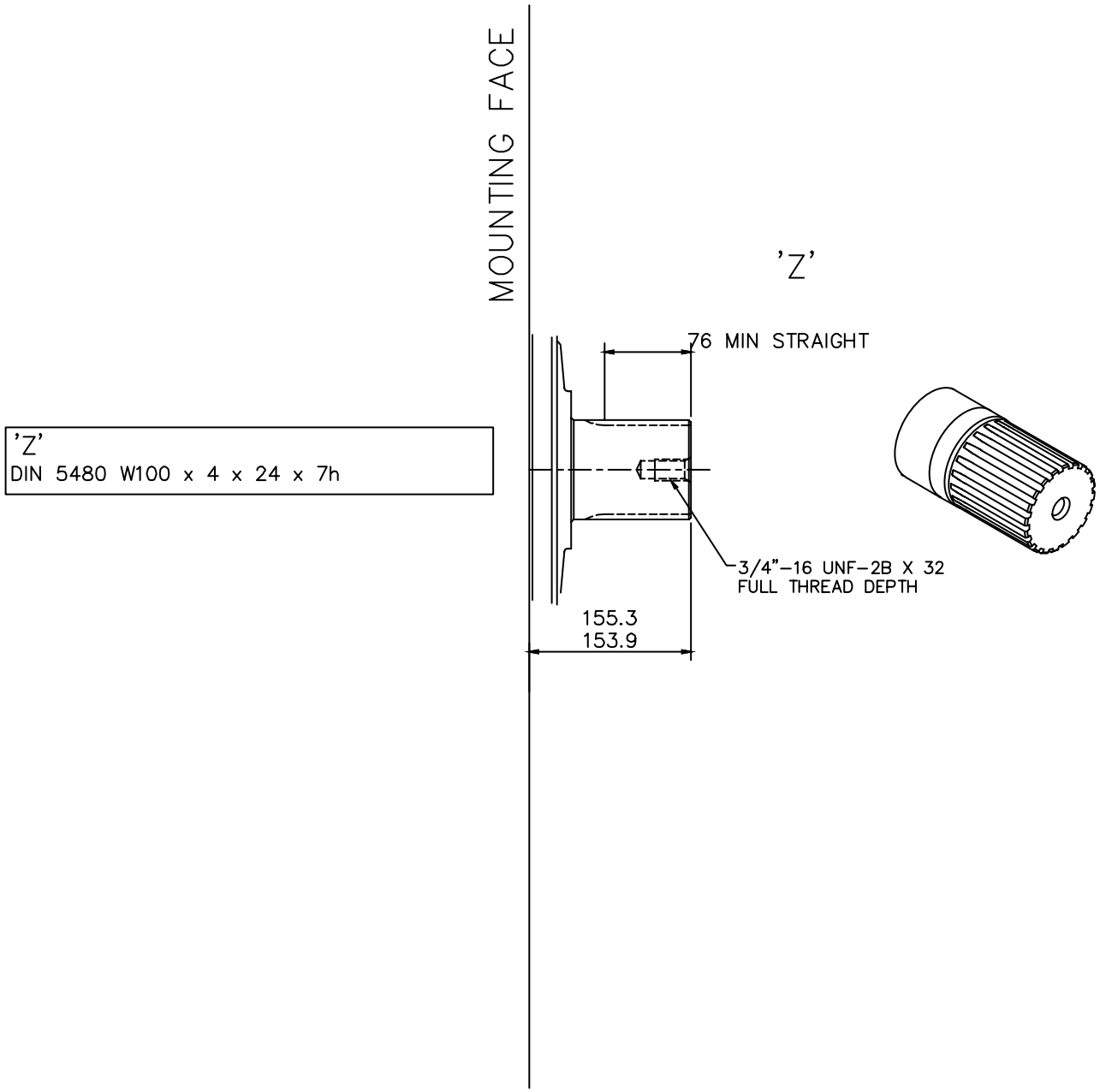

3-6 HPB325 (cont)

'F4' & 'FM4' Valve Housings

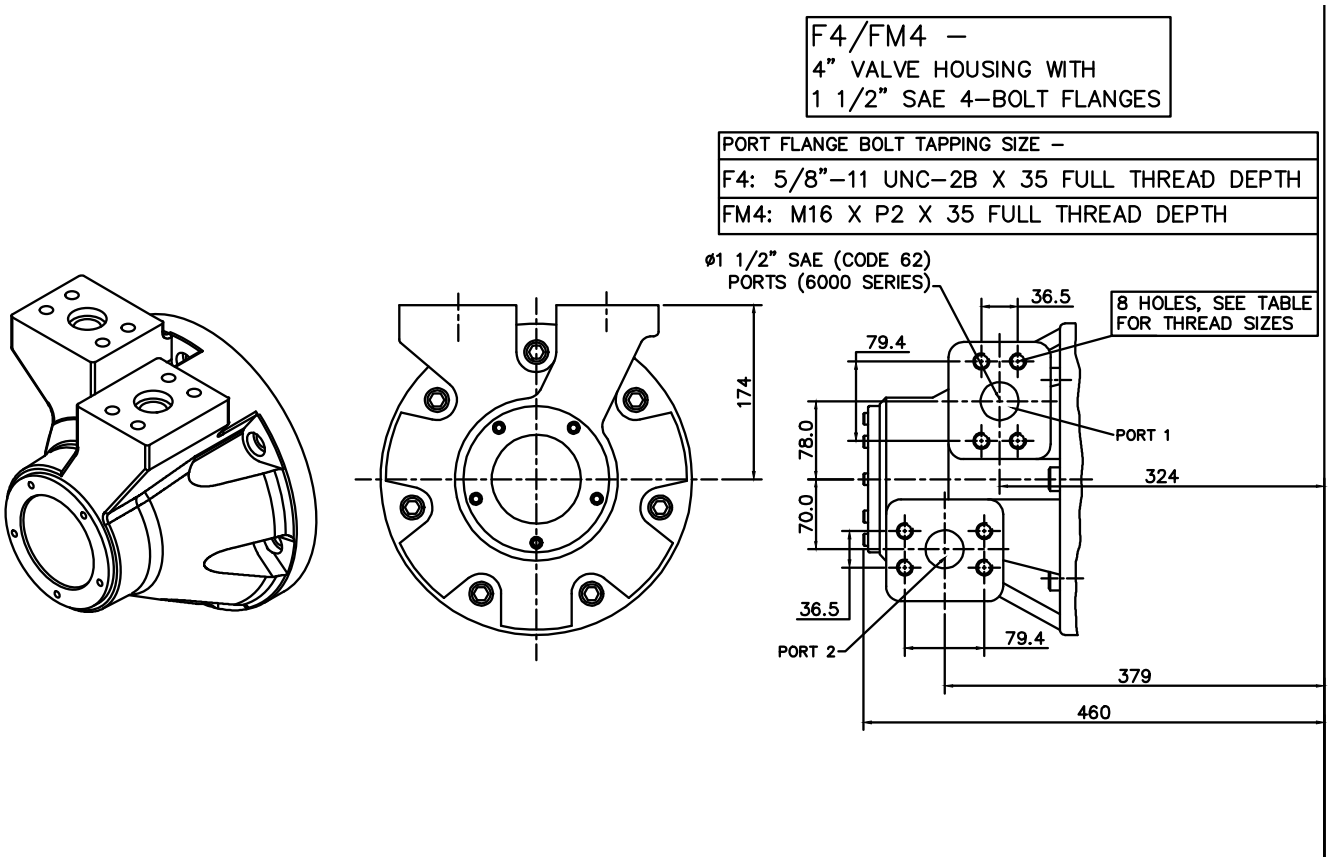

3-6 HPB325 (cont)

Installation

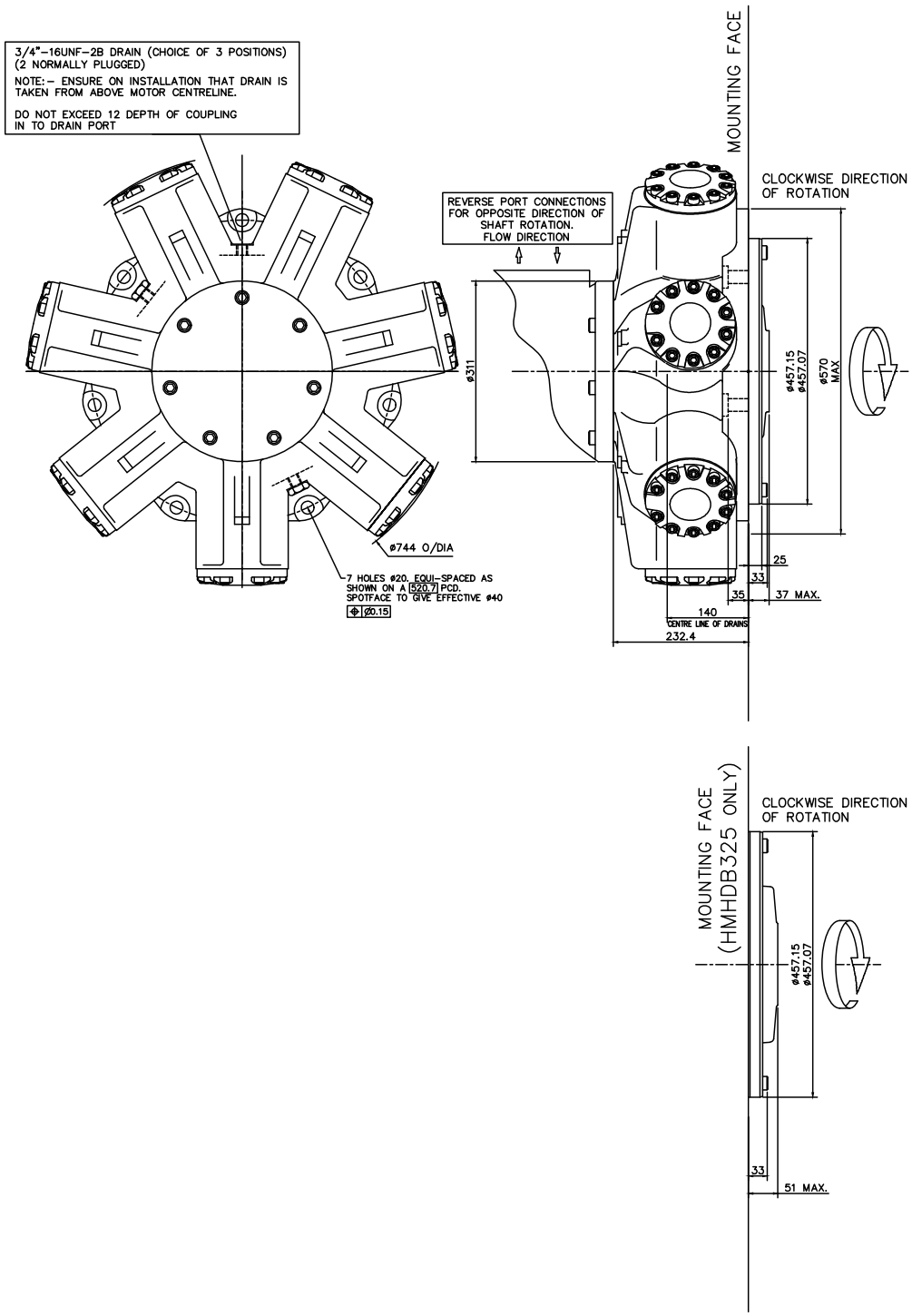

NOTES

Conversion Table

Pressure	
bar	PSI
1	14.5
Flow	
l/min	gal/min
1	0.264 US
1	0.219 UK
Length	
mm	inch
25.4	1
Torque	
Nm	lbf ft
1	1.737
Power	
kW	hp
1	1.341
Mass	
kg	lb
1	2.2

NOTES

NOTES

KAWASAKI PRECISION MACHINERY (UK) LTD
Ernesettle, Plymouth
Devon, PL5 2SA, England

Tel: +44 1752 364394
Fax: +44 1752 364816
Mail: info@kpm-uk.co.uk
Website: www.kawasakihydraulics.com

OTHER GLOBAL SALES OFFICES

JAPAN
Kawasaki Heavy Industry Ltd, Precision Machinery Ltd. Tokyo Office World Trade Center Bidg.
4-1 Hamamatsu-cho
2-chome, Minato-ku
Tokyo 105-6116
Japan
Tel: +81-3-3435-6862
Website: www.khi.co.jp/kpm

U.S.A
Kawasaki Precision Machinery (U.S.A.), Inc.
3838 Broadmoor Avenue S.E.
Grand Rapids
Michigan 49512
U.S.A.
Tel: +1-616-975-3101
Website: www.kpm-usa.com

CHINA
Kawasaki Precision Machinery Trading (Shanghai) Co., Ltd. 17th Floor (Room 1701), The Headquarters Building No168 XiZang Road (M)
Huangpu District
Shanghai 200001
China
Tel: +86-021-3366-3800

The specified data is for product description purposes only and may not be deemed to be guaranteed unless expressly confirmed in the contract.

Data sheet: M-200610.18