Kawasaki
Powering your potential

Precision Machinery Company

# Fixed Displacement Radial Piston
# Staffa Motor
# HPB Series

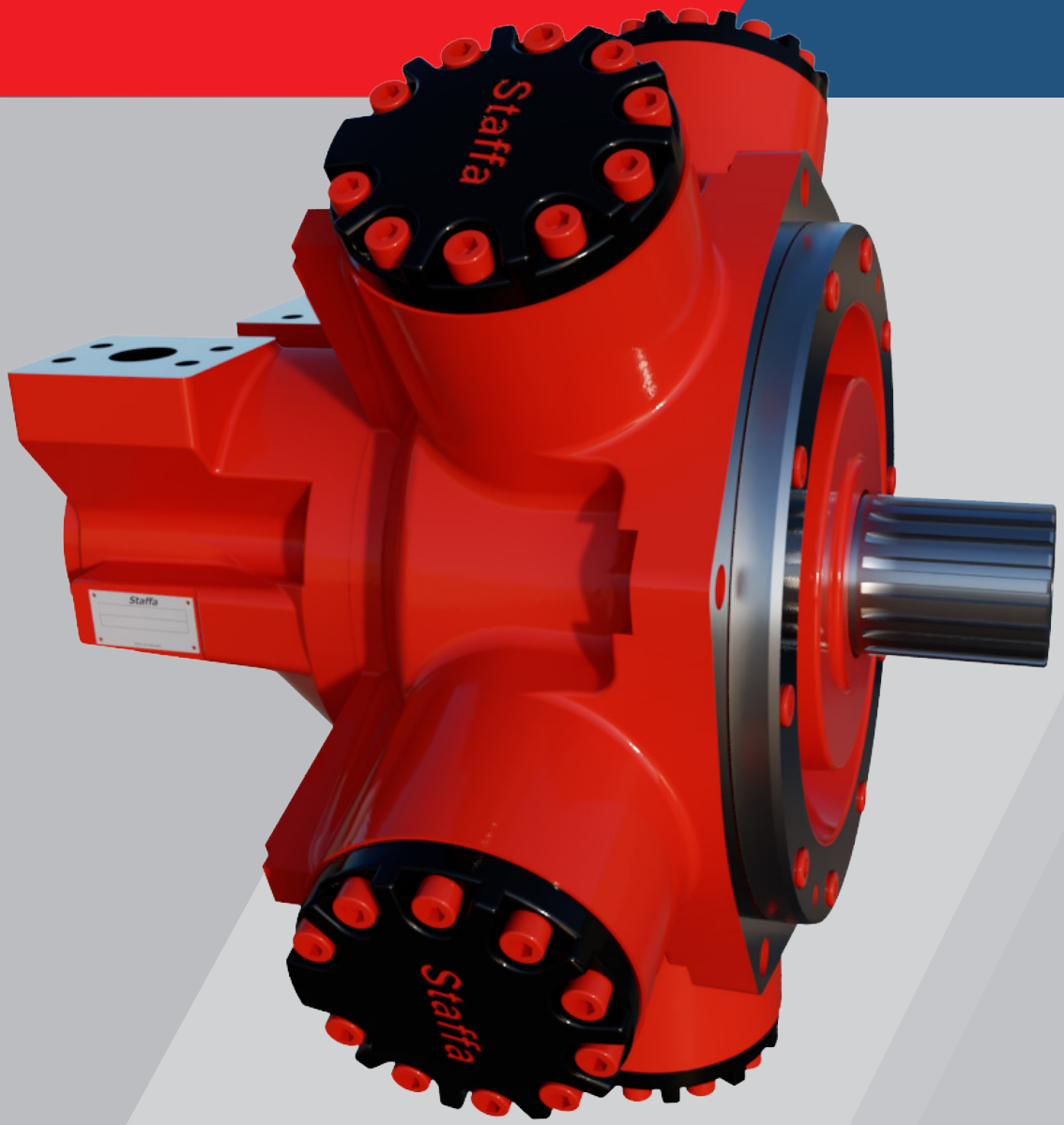

# CONTENTS


**Specifications and Features** 3 - 4

**1. Ordering Code**

1-1. Model Coding 5

**2. Technical Information**

2-1. Performance Data 6 - 11

2-2. Volumetric Efficiency Data 12

2-3. Shaft Power Calculations 13

2-4. Functional Symbols 14

2-5. Shaft Stress Limits 15

2-6. Bearing Life Notes 16

2-7. Circuit and Application Notes 17 - 19

2-8. Motor Operation at Low Temperatures 20

2-9. Freewheeling Notes 21

2-10. Crankcase Drain Connections 22

2-11. Installation Data 23

2-12. Special Features 24 - 36

2-13. Speed Sensing Options 37

**3. Dimensions**

3-1. HPB060/080 Installation 38 - 39

3-2. HPB100 Installation 40 - 44

3-3. HPB125 Installation 45 - 49

3-4. HPB150/200 Installation 50 - 54

3-5. HPB270 Installation 55 - 56

3-6. HPB325 Installation 57 - 67

# HPB Series

## Fixed Displacement Radial Piston Hydraulic Motor

### General Descriptions

The Kawasaki Staffa range of high torque low speed fixed displacement radial piston hydraulic motors consists of 8 frame sizes ranging from the HPB060 to HPB325. Capacity ranges from 983 to 5,310cc/rev.

The rugged, well proven design incorporates high efficiency combined with good breakout torque and smooth running capability. Various features and options are available including, on request, mountings to match competitors' interfaces.

The Kawasaki Staffa range also includes dual and triple displacement motors. To obtain details of these product ranges please See HMC, HPC and HMF series datasheets.

### Features

- **Very high power limit**
- **Rugged, reliable, proven design**
- **Unique hydrostatic balancing provides minimum wear and extended life**
- **High volumetric and mechanical efficiency**
- **Capacities range from 983 to 5,310cc/rev**
- **Large variety of shaft and porting options**
- **Output torque up to 23,000Nm**
- **Wide range of mounting interfaces available**
- **Alternative displacements also available**

| Motor Type | Displace-ment | Ideal Specific Torque | Mechanical Efficiency | Operating Pressure | Peak Pressure | Power Rating | Speed Rating |
|---|---|---|---|---|---|---|---|
| | cc/rev | N m/bar | % | bar | bar | kW | rpm |
| **HPB060** | 983 | 15.6 | 93.3 | 300 | 405 | 131 | 450 |
| **HPB080** | 1344 | 21.4 | 94.4 | 300 | 405 | 147 | 340 |
| **HPB100** | 1600 | 25.5 | 95.4 | 300 | 405 | 165 | 270 |
| **HPB125** | 2050 | 32.6 | 94.5 | 300 | 405 | 202 | 300 |
| **HPB150** | 2470 | 39.3 | 95.1 | 300 | 405 | 234 | 250 |
| **HPB200** | 3087 | 49.1 | 96.1 | 300 | 405 | 261 | 230 |
| **HPB270** | 4310 | 68.6 | 96.1 | 300 | 405 | 278 | 150 |
| **HPB325** | 5310 | 84.5 | 96.1 | 300 | 405 | 278 | 150 |

**For detailed performance figures see Section 2-1*

# 1 Ordering Code

## 1-1 Model Coding

F11/HPB 060 / S3 V/ FM3/Tj/ */ P*****

**Fluid Type**

| | |
|---|---|
| Blank | Mineral oil |
| F3 | Phosphate ester (HFD fluid) |
| F11 | Water based fluids (HFA, HFB & HFC) |
| Alternative fluids contact Kawasaki | |

**Model Type**

| | |
|---|---|
| HPB | Standard |
| HPHDB | Heavy duty |

**Motor Frame Size**

See options Section 2-1

**Shaft Type**

See Section 3. Dimensions

**Shaft Orientation**

| | |
|---|---|
| Blank | Horizontal and vertically down |
| V | Vertically Up |

**Main Port Connections**

See Section 3. Dimensions

**Special Features**

| | |
|---|---|
| P***** | Special features (see Section 2-12) |
| PL**** | Non-catalogued features, (****) = number assigned by Kawasaki as required |

**Design Series Number**

Current series for HPB motors

**Speed Sensor**

| | |
|---|---|
| Blank | None |
| Tj* | Square wave output with directional signal* |
| Tk | Combines Tj with the T401 instrument to give a 4 to 20 mA output proportional to speed. Directional signal and speed relay output. |

*See Section 2-13*

# 1-1 Model Coding

## Special Features Suffix

/ P * * * * *

### Shaft Seal Enhancements

| | |
|---|---|
| A | High pressure shaft seal |
| B | Improved shaft seal life |
| C | High pressure shaft seal & improved shaft seal life |
| 0 | None |

See Section 2-12 for details

### External Protection

| | |
|---|---|
| B | Marine-specification primer paint |
| D | Unpainted |
| E | Marine Specification Cylinder Heads |
| F | Marine spec Cylinder Heads + Marine specification paint HP20 |
| G | Marine spec Cylinder Heads + Carboline grey paint |
| 0 | None |

See Section 2-12 for details

### Installation Features

| | |
|---|---|
| A | Drain port adaptor x 1 |
| B | Drain port adaptor x 2 |
| C | Φ21 mm mounting holes |
| D | Φ22 mm mounting holes |
| E | Φ21 mm mounting holes & Drain port adaptor x 1 |
| F | Φ21 mm mounting holes & Drain port adaptor x 2 |
| G | Φ22 mm mounting holes & Drain port adaptor x 1 |
| H | Φ22 mm mounting holes & Drain port adaptor x 2 |
| 0 | None |

See Section 2-11 for details

### Valve Enhancements

| | |
|---|---|
| A | Improved cavitation resistance |
| B | Anti-clockwise |
| C | Thermal shock resistance |
| D | Improved caviation resistance & anti-clockwise |
| E | Improved cavitation resistance & thermal shock resistance |
| F | Anti-clockwise & thermal shock resistance |
| G | Improved cavitation resistance & anti-clockwise & thermal shock resistance |
| 0 | None |

See Section 2-12 for details

### Performance Enhancements

| | |
|---|---|
| A | Increased starting torque |
| 0 | None |

See Section 2-12 for details

# 2 Technical Information

## 2-1 Performance Data

### Rating definitions

#### Continuous rating

For continuous duty the motor must be operating within each of the maximum values for speed, pressure and power.

#### Intermittent rating

Operation within the intermittent power rating (up to the maximum continuous speed) is permitted on a 15% duty basis, for periods up to 5 minutes maximum.

#### Intermittent max pressure

Intermittent max pressure: 300 bar.
This pressure is allowable on the following basis:

a) Up to 50rpm 15% duty for periods up to 5 minutes maximum.
b) Over 50rpm 2% duty for periods up to 30 seconds maximum.

Static pressure to DNV rules 405bar (DNV-GL-RU-Ship Part 4).

### Limits for fire resistant fluids

| Fluid Type | Continuous Pressure (bar) | Intermittent Pressure (bar) | Max Speed (rpm) | Model Type |
|---|---|---|---|---|
| HFA 5/95 oil-in-water emulsion | 130 | 138 | 50% of limits of mineral oil | All models |
| HFB 60/40 water-in-oil emulsion | 138 | 172 | As for mineral oil | All models |
| HFC water glycol | 103 | 138 | 50% of limits of mineral oil | All models |
| HFD phosphate ester | 250 | 300 | As for mineral oil | All models |

# 2-1 Performance Data

## Specifications

| Motor Type | Displace-ment (cc/rev) | Ideal Torque (N m/bar) | Average Running Mechanical Efficiency (%) | Average Starting Mechanical Efficiency (%) | Max Cont. Speed (rpm) | Max Cont. Power with Flushing (kW) | Max Cont. Power (kW) | Max Cont. Pressure (bar) | Max Int. Pressure (bar) |
|---|---|---|---|---|---|---|---|---|---|
| **HPB060 (FM3)** | 983 | 15.6 | 93.0 | 80.1 | 450 | 131 | 115 | 250 | 300 |
| **HPB060 (FM4)** | 983 | 15.6 | 93.0 | 80.1 | 490 | 131 | 115 | 250 | 300 |
| **HPB080 (FM3)** | 1,344 | 21.4 | 94.4 | 84.5 | 340 | 147 | 130 | 250 | 300 |
| **HPB080 (FM4)** | 1,344 | 21.4 | 94.4 | 84.5 | 430 | 147 | 130 | 250 | 300 |
| **HPB100 (FM3)** | 1,600 | 25.5 | 94.5 | 86.2 | 270 | 165 | 140 | 250 | 300 |
| **HPB100 (FM4)** | 1,600 | 25.5 | 94.5 | 86.2 | 365 | 165 | 140 | 250 | 300 |
| **HPB125 (FM3)** | 2,050 | 32.6 | 94.5 | 81 | 215 | 173 | 135 | 250 | 300 |
| **HPB125 (FM4)** | 2,050 | 32.6 | 94.5 | 81 | 300 | 202 | 150 | 250 | 300 |
| **HPB150 (FM3)** | 2,470 | 39.3 | 95.4 | 83.8 | 200 | 195 | 156 | 250 | 300 |
| **HPB150 (FM4)** | 2,470 | 39.3 | 95.4 | 83.8 | 250 | 234 | 185 | 250 | 300 |
| **HPB200 (FM3)** | 3,087 | 49.1 | 96.3 | 87 | 175 | 216 | 174 | 250 | 300 |
| **HPB200 (FM4)** | 3,087 | 49.1 | 96.3 | 87 | 230 | 261 | 210 | 250 | 300 |
| **HPB270** | 4,310 | 68.6 | 95.8 | 87.2 | 150 | 278 | 215 | 250 | 300 |
| **HPB325** | 5,310 | 84.5 | 96.3 | 87.9 | 130 | 278 | 215 | 250 | 300 |

Other non-standard displacements are possible - check with Kawasaki for details.

# 2-1 Performance Data (cont)

## Output Torque Curves

These torque curves indicate the maximum output torque and power of a fully run-in motor for a range of pressures and speeds when operating with zero outlet pressure on Mineral Oil of 50cSt (232 SUS) viscosity. High return line pressures will reduce torque for a given pressure differential.

### HPB060

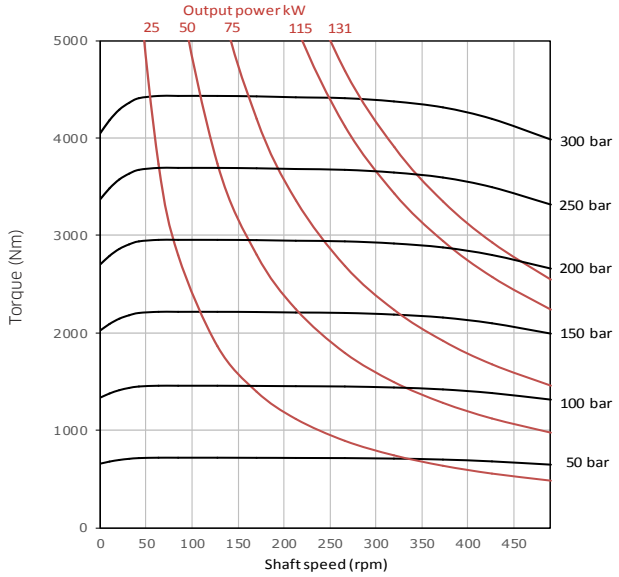


### HPB080

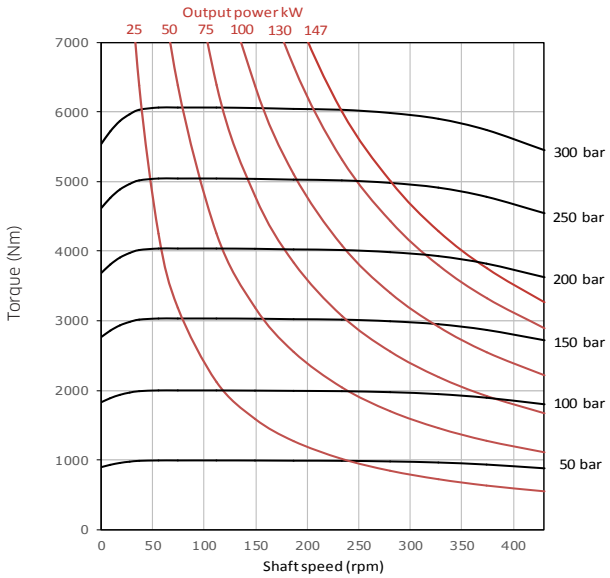


### HPB100

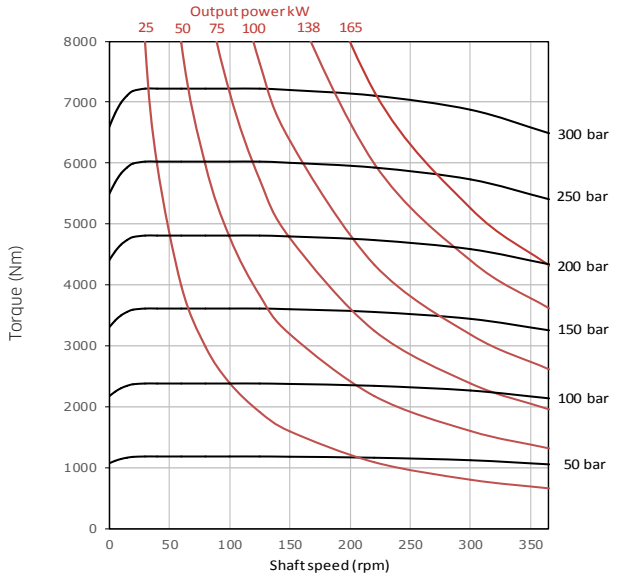


### HPB125

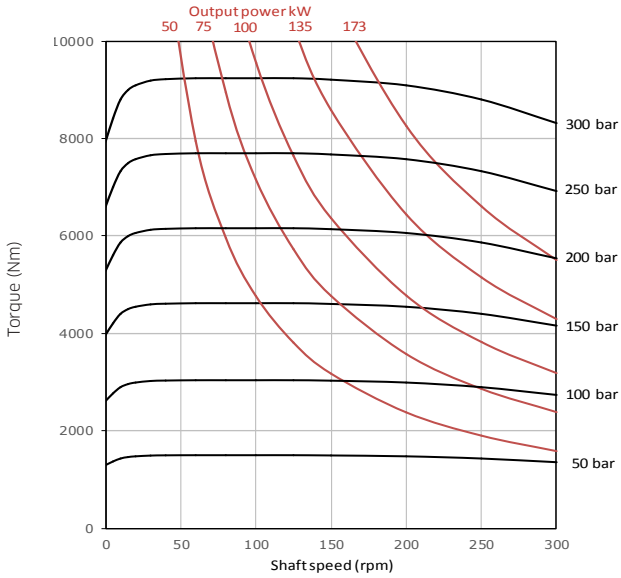

# 2-1 Performance Data (cont)

## Output Torque Curves (cont)

### HPB150

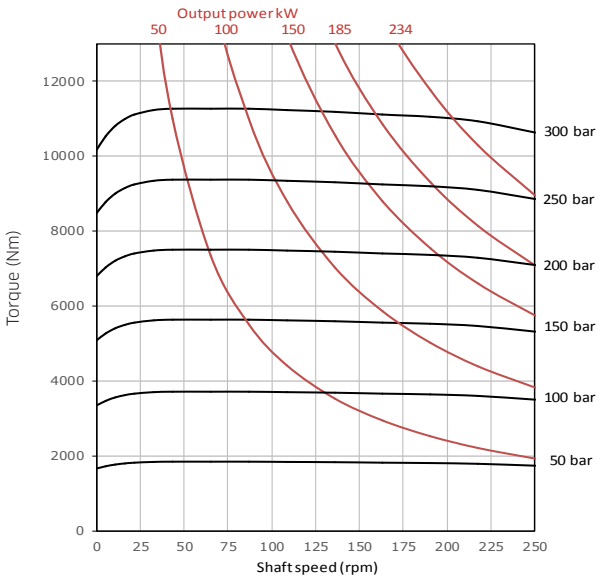


### HPB200

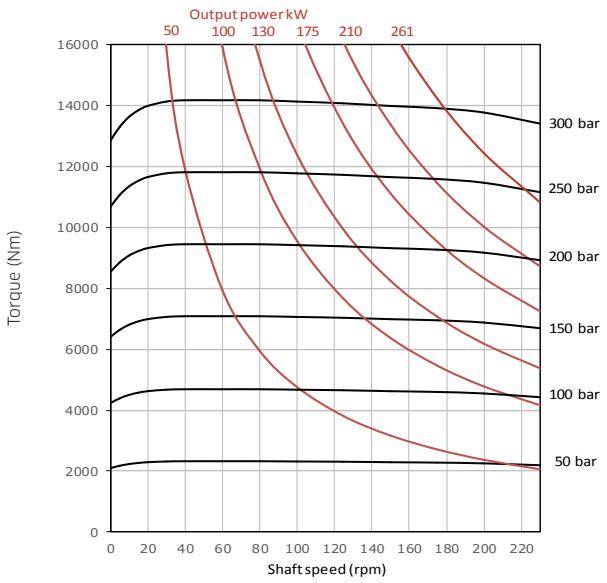


### HPB270

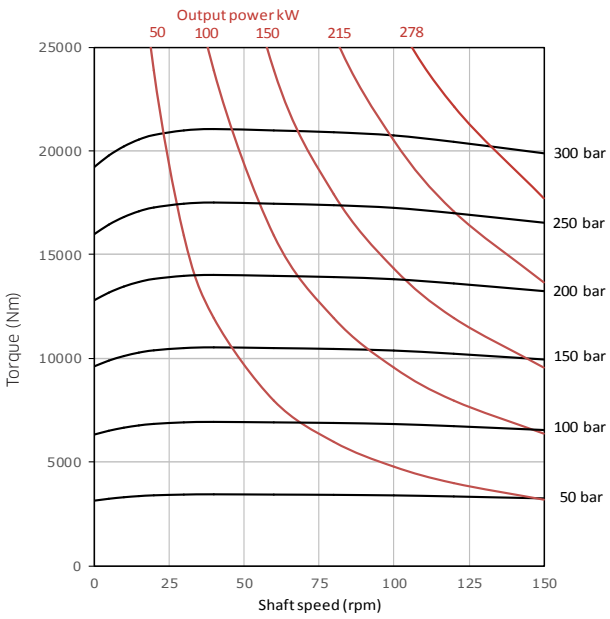


### HPB325

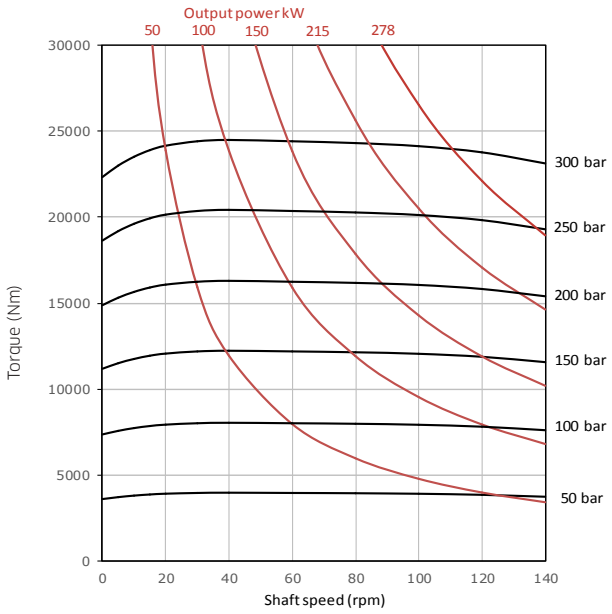

# 2-2 Volumetric Efficiency Data

| Motor Type | Displacement | Zero Speed Constant | Speed Constant | Creep Speed Constant | Crankcase Leakage Constant |
|---|---|---|---|---|---|
| **HPB** | **cc/rev** | **$K_1$** | **$K_2$** | **$K_3$** | **$K_4$** |
| HPB060 | 983 | 9.50 | 45.70 | 7.80 | 7.90 |
| HPB080 | 1,344 | 9.50 | 45.70 | 5.80 | 7.90 |
| HPB100 | 1,600 | 9.50 | 45.70 | 4.80 | 7.90 |
| HPB125 | 2,050 | 6.10 | 38.50 | 3.00 | 4.25 |
| HPB150 | 2,470 | 6.10 | 38.50 | 2.50 | 4.25 |
| HPB200 | 3,087 | 6.10 | 38.50 | 2.00 | 4.25 |
| HPB270 | 4,310 | 6.50 | 37.30 | 1.50 | 6.00 |
| HPB325 | 5,310 | 6.50 | 40.00 | 1.30 | 6.00 |

| Fluid Viscosity | Viscosity Factor |
|---|---|
| **cSt** | **Kv** |
| 20 | 1.58 |
| 25 | 1.44 |
| 30 | 1.30 |
| 40 | 1.10 |
| 50 | 1.00 |
| 60 | 0.88 |

| | | |
|---|---|---|
| **Qt (total leakage)** | = $[K_1 + n/K_2] \times \Delta P \times Kv \times 0.005$ | l/min |
| **Creep speed** | = $K_3 \times \Delta P \times Kv \times 0.005$ | rpm |
| **Crankcase leakage** | = $K_4 \times \Delta P \times Kv \times 0.005$ | l/min |
| **ΔP** | = differential pressure | bar |
| **n** | = speed | rpm |

The motor volumetric efficiency can be calculated as follows:

$$\text{Volumetric efficiency (\%)} = \left[\frac{(\text{speed} \times \text{disp.})}{(\text{speed} \times \text{disp.}) + Q_t}\right] \times 100$$

**Example:**

HPB200 motor with displacement of 3.087 l/rev.

| | |
|---|---|
| Speed | 60rpm |
| Differential pressure | 200bar |
| Fluid viscosity | 50 cSt |

Total leakage = $(K_1 + n/K_2) \times \Delta P \times Kv \times 0.005$ l/min

= $(6.10 + 60/38.50) \times 200 \times 1 \times 0.005$

= 7.66 l/min

$$\text{Volumetric efficiency} = \left[\frac{(60 \times 3.087)}{(60 \times 3.087) + 7.66}\right] \times 100$$

= 96.0%

# 2-3 Shaft Power Calculation

## Example

**Firstly, to find the maximum differential pressure ΔP at rated speed:**

Select the rated shaft power (W) for the motor from the performance data table (in Section 2-1).
This is presented in kilowatts so must be converted to watts (x1000).

Then also take the actual average running torque in N m/bar ($T_0$) and the rated shaft speed in rpm (n).

$$W = \frac{T_0 \cdot \Delta P \cdot 2\pi \cdot n}{60}$$

Or to find maximum ΔP then use:

$$\Delta P = \frac{60 \cdot W}{2\pi \cdot T_0 \cdot n}$$

### HPB125-FM4 Example:

| | |
|---|---|
| Rated shaft power, W (W): | 150,000 |
| Average actual running torque, $T_0$ (Nm/bar): | 32.6 |
| Average running mechanical efficiency(Nm/bar): | 94.5% |
| Rated shaft speed, n (rpm): | 300 |

$$\Delta P = \frac{60 \times 150{,}000}{2\pi \times 32.6 \times 300}$$

**ΔP= 146 bar (max.)**

Secondly, to find the maximum speed at rated pressure (using the same information as before):

$$n = \frac{60 \cdot W}{2\pi \cdot T_0 \cdot \Delta P}$$

Rated pressure (bar): 250

$$n = \frac{60 \times 150{,}000}{2\pi \times 32.6 \times 250}$$

**n = 176rpm (max.)**

In summary, operating the motor within its shaft power limit, at rated speed, would give a maximum pressure of 146 bar, and operating the motor at rated pressure, would give a maximum speed of 176rpm.

**Notes**

**1)** The maximum calculated speed is based on a rated inlet pressure of 250bar.
**2)** The maximum shaft power is only allowable if the motor drain temperature remains below 80°C.
**3)** The maximum calculated differential pressure assumes that the low pressure motor port is less than 30bar.

## 2-4 Functional Symbols

-F(M)3-; F(M)4-; SM3

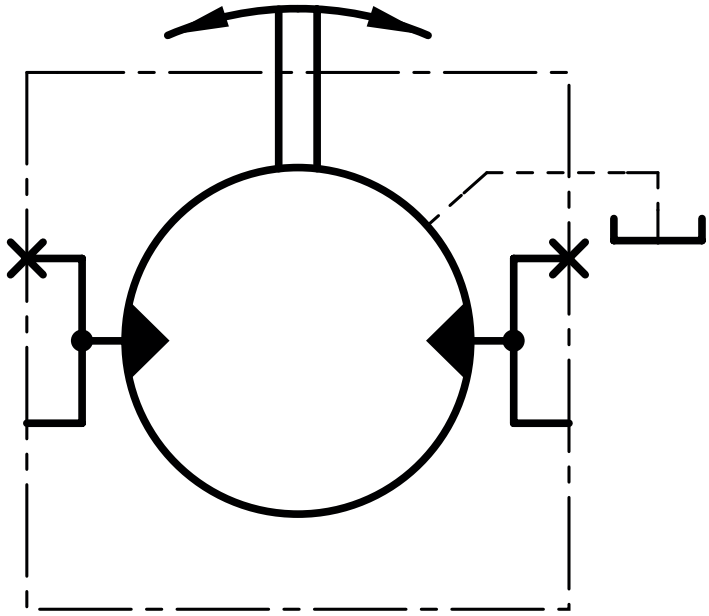

# 2-5 Stress Limits

When applying large external radial loads, consideration should also be given to motor bearing lives (see Section 2-6).

| Motor Frame Size | Shaft Types | Maximum External Radial Bending Moment [Nm] |
|---|---|---|
| HPB060, 080 & 100 | P, S, Z & T | 5,500 |
| HPB125, 150 & 200 | P1, S3, S4, Z3, & T | 6,600 |
| HPHDB125, 150, 200 | S5, Z5 & P2 | 12,750 |
| HPB270 & 325 | P1, S3, Z3 & T | 7,500 |
| HPHDB270 & 325 | P2, S5 & Z5 | 15,900 |

**Example:**

Determine the maximum radial shaft load of a HPB080 motor:

Radial load offset, A = 100mm
Maximum radial load, W = 5,500 (see table)/100
**= 55kN (5,607 kg)**

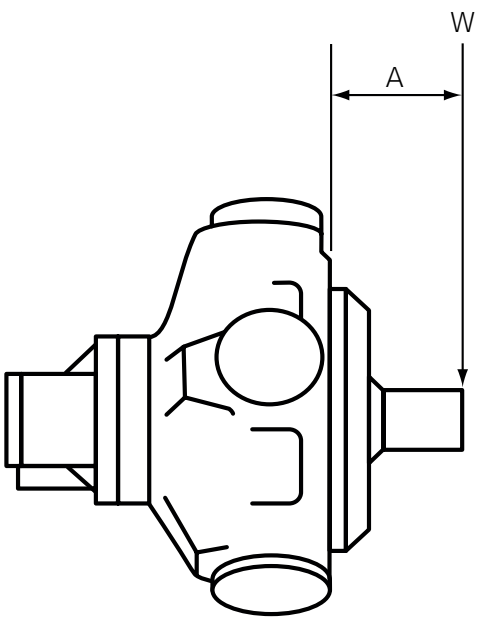


**A** = Distance from mounting face to load centre (mm)

**W** = Side load (N)

**NOTE:**
The offset distance A is assumed to be greater than 50mm. Contact Kawasaki if this is not the case.

# 2-6 Bearing Life Notes

Consideration should be given to the required motor bearing life in terms of baring service life. The factors that will determine bearing life include:

**1) Duty cycle - time spent on and off load**

**2) Speed**

**3) Differential pressure**

**4) Fluid viscosity**

**5) External radial shaft load**

**6) External axial shaft load**

**NOTE:**
A heavy duty HPB motor can be ordered to further improve bearing life.
Consult Kawasaki for a detailed bearing life calculation.

# 2-7 Circuit and Application Notes

## Starting Torque

Staffa motors are very efficient even at low speeds. The starting mechanical efficiencies given in Section 2-1 should be used for speeds lower than 15rpm. These values, and the torque curves shown in Section 2-1 may vary with system parameters.

## Low Speed Operations

Minimum operating speeds are determined by the hydraulic system and load conditions (load inertia, drive elasticity, etc.) Recommended minimum speeds are shown below:

| Model Type | rpm |
|---|---|
| HPB060/080/100 | 3 |
| HPB/125/150/200 | 3 |
| HPB270/325 | 2 |

## High Back Pressure

When both inlet and outlet ports are pressurised continuously, the lower port pressure must not exceed 100 bar at any time.

**NOTE:** High back pressure reduces the effective torque output of the motor.

## Boost Pressure

When operating as a motor the outlet pressure should equal or exceed the crankcase pressure. If pumping occurs (i.e. overrunning loads) then a positive pressure, "P", is required at the motor ports. Calculate "P" (bar) from the operating formula Boost Formula $P = 1 + \frac{N^2 \times V^2}{K} + C$

Where P is in bar, N = motor speed (rpm), V = motor displacement (cc/rev), C = crankcase pressure (bar) and K=a constant from the table below:

| Motor | Porting | Constant (K) |
|---|---|---|
| HPB060, HPB080 & HPB100 | F(M)3 SM3 | $1.8 \times 10^{10}$ |
| HPB125, HPB150 & HPB200 | FM(3) SM3 | $4.0 \times 10^{10}$ |
| | FM(4) | $8.0 \times 10^{10}$ |
| HPB270 & HPB325 | FM(4) | $7.2 \times 10^{10}$ |

# 2-7 Circuit and Application Notes (cont)

The flow rate of oil needed for the make-up system can be estimated from the crankcase leakage data (see Section 2-2 for calculation method). Allowances should be made for other system losses and also for "fair wear and tear" during the life of the motor, pump and system components.

## Cooling Flow

Operating within the continuous rating does not require any additional cooling.

For operating conditions above "continuous", up to the "intermittent" rating, additional cooling oil may be required. This can be introduced through the spare crankcase drain ports.

Consult Kawasaki about such applications.

## Motorcase Pressure

With the standard shaft seal fitted, the motor casing pressure should not exceed 3.5bar.

**NOTES**

**1)** The casing pressure at all times must not exceed either the motor inlet or outlet pressure.

**2)** High pressure shaft seals are available for casing pressure of 10bar.

**3)** Check installation dimensions for maximum crankcase drain fitting depth.

**CAUTION**

For trouble free operation the motor's crankcase pressure must always be lower than both of the motor port pressures:

$P_{case} < P_{in}$ and $P_{case} < P_{out}$

## Hydraulic Fluids

Dependent on motor (see model code fluid type - Section 1-1) suitable fluids include:

**a)** Antiwear hydraulic oils

**b)** Phosphate ester (HFD fluids)

**c)** Water glycols (HFC fluids)

**d)** 60/40% water-in-oil emulsions (HFB fluids)

**e)** 5/95% oil-in-water emulsions (HFA fluids)

**f)** Antiwear environmentally acceptable lubricants (EALs)

Some fluids require a reduction in pressure and speed limits. Please see table in Section 2-1.

Viscosity limits when using any fluid except oil-in-water (5/95) emulsions are:

| | |
|---|---|
| **Max. off load:** | **2,000cSt** (9270 SUS) |
| **Max. on load:** | **150cSt** (695 SUS) |
| **Optimum:** | **50cSt** (232 SUS) |
| **Minimum:** | **25cSt** (119 SUS) |

## Temperature Limits

| | |
|---|---|
| **Ambient min.** | -30°C (-22°F) |
| **Ambient max.** | +70°C (158°F) |

Max. operating temperature range.

| | **Mineral oil** | **Water containing** |
|---|---|---|
| **Min** | -20°C (-4°F) | +10°C (50°F) |
| **Max.** | +80°C (175°F) | +54°C (130°F) |

**NOTE:** To obtain optimum services life from both fluid and hydraulic systems components, a fluid operating temperature of 40°C is recommended.

# 2-7 Circuit and Application Notes (cont)

## Mineral Oil Recommendations

The fluid should be a good hydraulic grade, non-detergent mineral oil. It should contain anti-oxidant, antifoam and demulsifying additives. It must contain antiwear or extreme pressure (EP) additives. Automatic transmission fluids and motor oils are not recommended.

## Biodegradable Fluid Recommendations

Well-designed environmentally acceptable lubricants (EALs) may be used with Staffa motors. The EAL must be designed for use in hydraulic systems and have a synthetic ester base. Additives should be as listed for mineral oils, above. The performance of EALs with hydraulic systems vary widely and so checks for seal compatibility, copper alloy compatibility, oxidation resistance and lubrication properties should be carried out before selecting an EAL. For help with EALs please contact Kawasaki.

## Filtration

Full flow filtration (open circuit), or full boost flow filtration (closed circuit) to ensure system cleanliness to ISO4406 code 22/18/13 or cleaner.

## Noise Levels

The airborne noise level is less than 66.7dB(A) DIN & dB(A) NFPA through the continuous operating envelope. Where noise is a critical factor, installation resonances can be reduced by isolating the motor by elastomeric means from the structure and the return line installation. Potential return line resonances originating from liquid borne noise can be further attenuated by providing a return line back pressure of 2 to 5bar.

## Polar moment of intertia and mass table

| Motor Frame Size | Polar Moment of Intertia (kg m$^2$) (Typical data) | Mass (kg) (Approx. all models) |
|---|---|---|
| HPB060 | 0.0500 | 144 |
| HPB080 | 0.0600 | 144 |
| HPB100 | 0.0760 | 144 |
| HPB125 | 0.2200 | 217 |
| HPB150 | 0.2500 | 265 |
| HPB200 | 0.2700 | 265 |
| HPB270 | 0.4900 | 420 |
| HPB325 | 0.5000 | 429 |

# 2-8 Motor Operation at Low Temperature

When operating the motor at low temperature consideration should be given to the fluid viscosity. The maximum fluid viscosity before the shaft should be turned is 2,000cSt. The maximum fluid viscosity before load is applied to the motor shaft is 150cSt.

If low ambient temperature conditions exist, then a crankcase flushing flow of at least 5 l/min should be applied to the motor during periods when the motor is not in use.

The shaft seal temperature limits for both medium and high pressure applications are shown in the table below.

| | Non-operating temperature limits | Minimum operating temperature |
|---|---|---|
| Standard pressure shaft seal | below minus 40°C and above 100°C | minus 30°C |
| High pressure shaft seal | below minus 30°C and above 120°C | minus 15°C |

All seals are very brittle below minus 40°C and are likely to break very easily and due to their sluggish response may not provide a 100% leak free condition.

It should be noted that the maximum continuous operating temperature within the motor crankcase is plus 80°C.

## 2-9 Freewheeling Notes

All Staffa motors can be used in freewheeling applications.

In all circumstances it is essential that the motor is unloaded (A and B ports connected together) and that the circuit is boosted.

The required boost pressure is dependent on both the speed and displacement conditions.

It should be noted that for HPB series motors, to achieve freewheel, large flows will have to re-circulate around the motor.

This will require a large recirculating valve and consideration of circuit cooling as the motor will be generating a braking torque.

It is for these reasons that HMC, HPC or HMF series motors are the preferred option for freewheeling applications.

See HMB, HMC and HPC datasheets.

# 2-10 Crankcase Drain Connections

## Motor Axis - horizontal

The recommended minimum pipe size for drain line lengths up to approx. 5m is 12.0mm (½") bore. Longer drain lines should have their bore size increased to keep the crankcase pressure within limits.

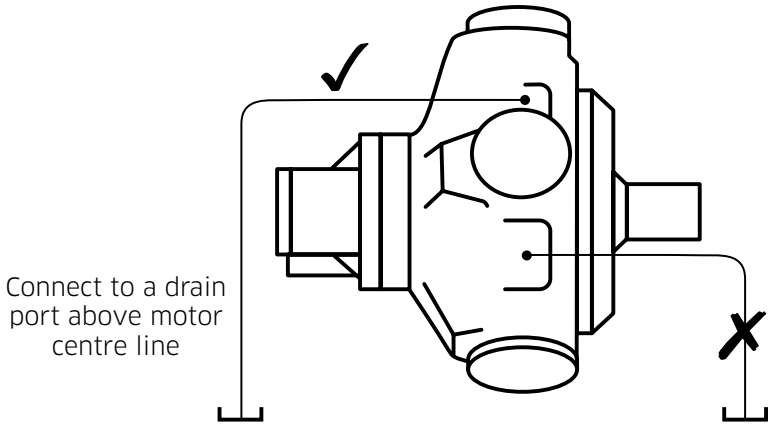


## Motor Axis - vertical shaft up

Specify "V" within the model code for extra drain port, G¼" (BSPF). Connect this port into the main drain line downstream of a 0.35bar check valve to ensure good bearing lubrication. The piping arrangement must not allow syphoning from the motorcase. (refer to installation drawing for details).

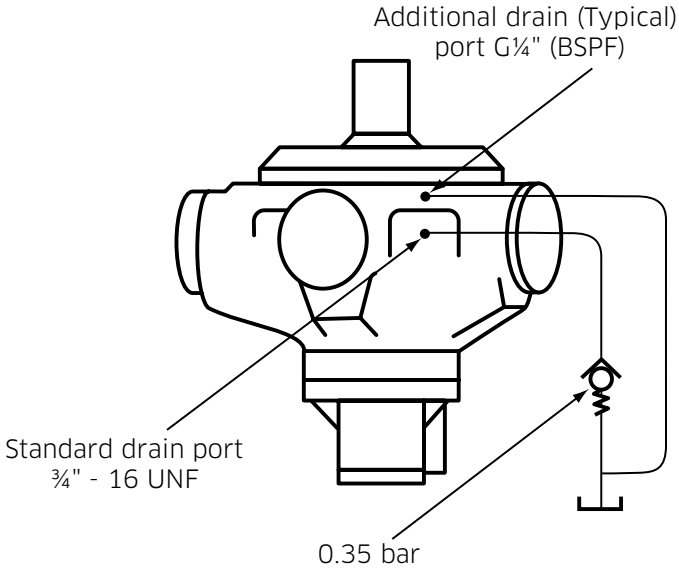


## Motor Axis - vertical shaft down

The piping, from any drain port, must be taken above the level of the motorcase to ensure good bearing lubrication. The arrangement must not allow syphoning from the motorcase.

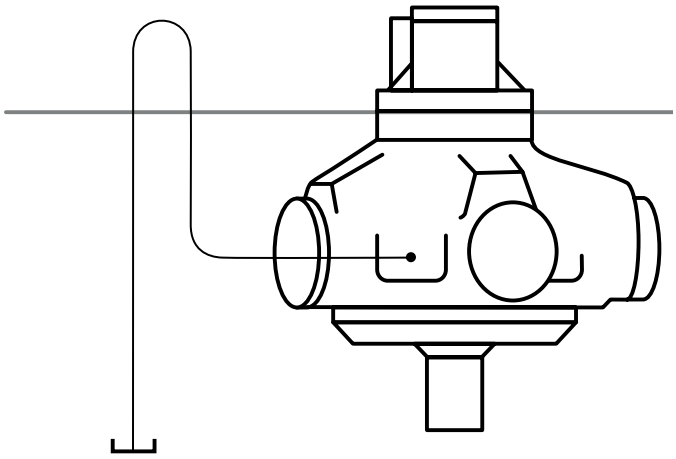

# 2-11 Installation Data

## Spigot

The motor should be located by the mounting spigot on a flat, robust surface using correctly sized bolts.

The diametrical clearance between the motor spigot and the mounting must not exceed 0.15mm. If the application incurs shock loading, frequent reversing or high speed running, then high tensile bolts should be used, including one fitted bolt.

## Bolt Torque

The recommended torque wrench setting for bolts is as follows:

| | |
|---|---|
| **M12** | 97 +/- 7Nm |
| **M14** | 160 +/- 12Nm |
| **M18** | 312 +/- 14 Nm |
| **M20** | 407 +/- 14 Nm |
| **M24** | 690 +/- 27 Nm |
| **½" UNF** | 97 +/- 7 Nm |
| **⅝“ UNF** | 265 +/- 14 Nm |
| **¾“ UNF** | 393 +/- 14 Nm |
| **1"** | 810 +/- 27 Nm |

## Shaft Coupling

Where the motor is solidly coupled to a shaft having independent bearings the shaft must be aligned to within 0.13mm TIR.

## End of Motor Life

The motor unit must be completely empty upon disposal. It must be disposed of according to national regulations and safety information for the disposal of hydraulic fluids.

All individual parts of the motor unit must be recycled. Separate the motor unit parts according to: cast iron, steel, aluminium, non-ferrous metal, electronic waste, plastic, and seals.

## 2-12 Special Features

| Feature | HPB 060/ 080 | HPB 100 | HPB 125 | HPB 150/200 | HPB 270 | HPB 325 |
|---|---|---|---|---|---|---|
| High Pressure Shaft Seal | ● | ● | ● | ● | ● | ● |
| Improved Shaft Seal Life | ● | ● | ● | ● | ● | ● |
| Improved Cavitation Resistance | ● | ● | ● | ● | ● | ● |
| Increased Starting Torque | ○ | ○ | ● | ● | ● | ● |
| Anti-clockwise Rotation | ● | ● | ● | ● | ● | ● |
| Thermal Shock Resistance | ● | ● | ● | ● | ● | ● |
| Drain Port Adaptor - ½" BSPP | ● | ● | ● | ● | ● | ● |
| Φ21mm Mounting Holes | ● | ● | ● | ● | ● | ● |
| Φ22mm Mounting Holes | ● | ● | ● | ● | ● | ● |
| Marine-specification Primer Paint | ● | ● | ● | ● | ● | ● |
| Marine-Style Cylinder Head | ● | ● | ● | ● | ● | ● |

● Available
○ Not available

If a motor is to be ordered with any special features listed, please contact Kawasaki.

# 2-12 Special Features (cont)

## High Pressure Shaft Seal

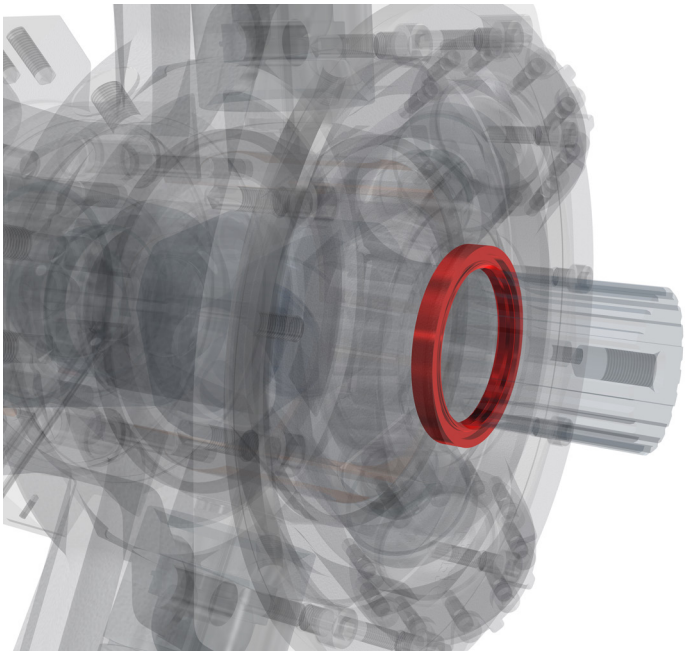

### Description:

> 10bar rated

> Recommended for cold climates

> Rugged aluminium construction

### Technical Information

Where crankcase pressure will be higher than 3.5 bar, the high pressure shaft seal should be selected.

| | |
|---|---|
| Case pressure | ≤ 10bar |
| Non-operating temperature limits | Below -30°C and above 120°C |
| Minimum operating temperature | -15°C |
| Maximum operating temperature | 80°C |
| Minimum viscosity | 2,000cSt |
| Maximum viscosity | 150cSt |

### Applicable to:

| HPB 060/ 080 | HPB 100 | HPB 125 | HPB 150/200 | HPB 270 | HPB 325 |
|---|---|---|---|---|---|
| ● | ● | ● | ● | ● | ● |

# 2-12 Special Features (cont)

## Improved Shaft Seal Life

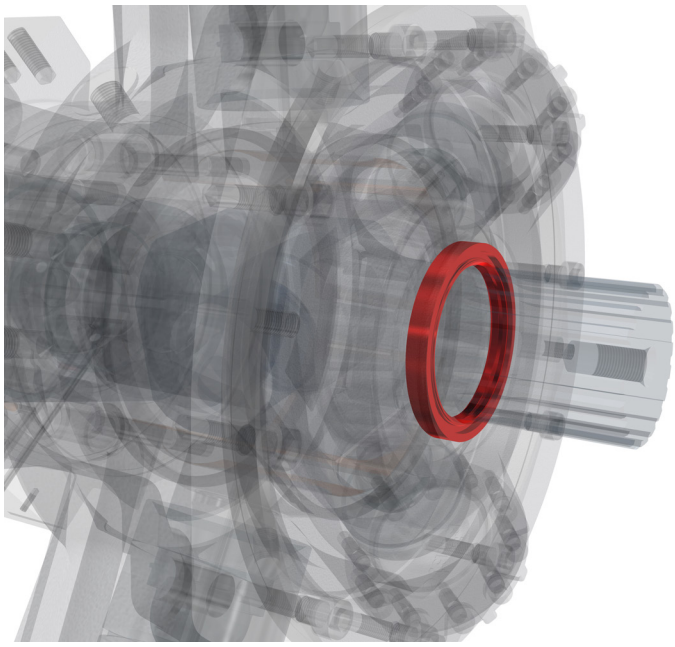

### Description:

> Stainless steel sleeve prevents corrosion

> Improved wear resistance

> Recommended for corrosive environments

### Technical Information

A well-established method of increasing rotary seal life in corrosive environments is to fit a thin-walled, stainless steel sleeve to the rotating shaft to provide a corrosion-resistant, wear-resistant counterface surface for the seal to run against. All HPB motors can be fitted with such sleeves upon request.

| | |
|---|---|
| Sleeve material | A304/301 Stainless Steel |
| Sleeve surface finish | $R_a$ 0.25 to 0.5µm (10 to 20µin) |

### Applicable to:

| HPB 060/ 080 | HPB 100 | HPB 125 | HPB 150/200 | HPB 270 | HPB 325 |
|---|---|---|---|---|---|
| ● | ● | ● | ● | ● | ● |

# 2-12 Special Features (cont)

## Improved Cavitation Resistance

### Description:

> Recommended for overunning applications

> Protects against seal damage for short periods of operation in vacuum inlet conditions.

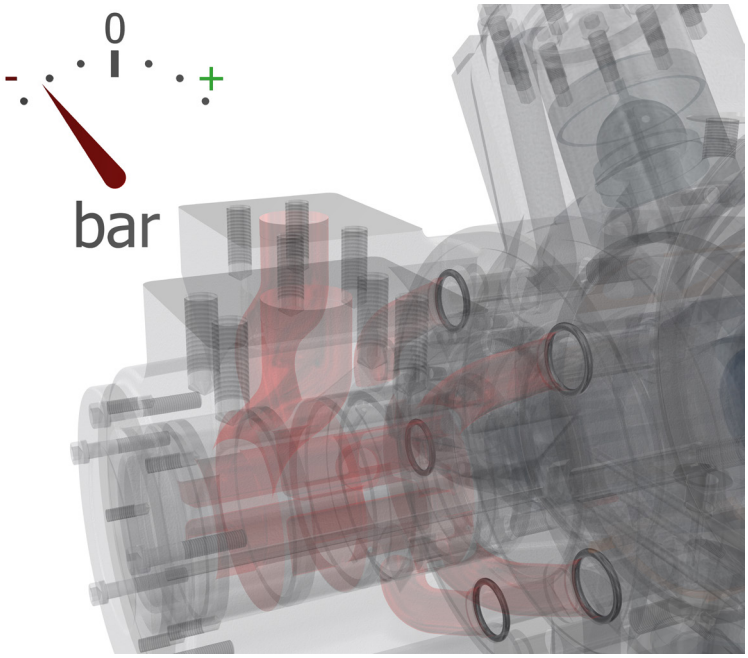


Cavitation can occur due to many different factors. Although it is not possible to make the HPB motor resistant to cavitation, certain features can be added to improve the motor's resistance to short periods of lost port pressure.

In applications where the HPB motor can be driven (like a pump) a risk arises that insufficient fluid will be provided to maintain a positive pressure at both main ports of the motor causing cavitation. The results of extended running at these conditions can be catastrophic to the motor's function.

The improved cavitation resistance feature should be considered where:

- Overrunning conditions may occur (load driving the motor)
- Loss of main port pressure while motor is rotating

### Applicable to:

| HPB 060/ 080 | HPB 100 | HPB 125 | HPB 150/200 | HPB 270 | HPB 325 |
|---|---|---|---|---|---|
| ● | ● | ● | ● | ● | ● |

# 2-12 Special Features (cont)

## Increased Starting Torque

### Description:

- > **Optimised for high break-out torque**
- > **Recommended for low speed operation**
- > **Improved service life for low speed applications**

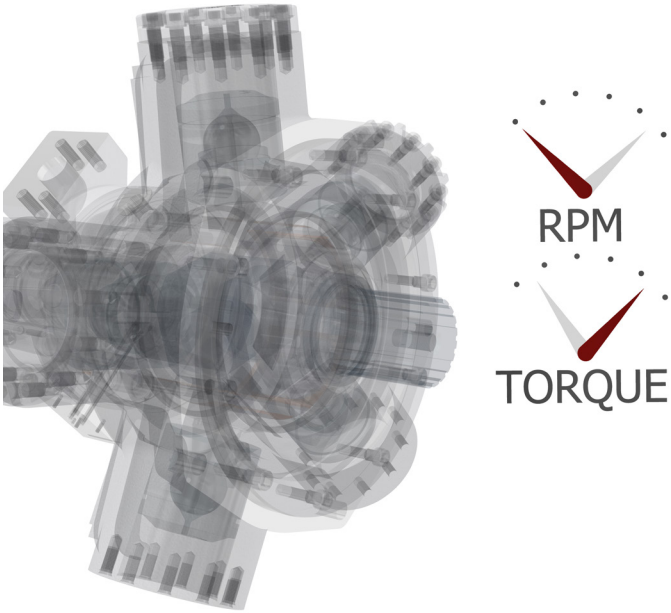


### Technical Information

**If an application demands the drive motor be run at speeds of less than 10 rpm for most of the duty cycle, or involves frequent start/stop or forward/reverse operation, the Staffa HPB motor range has it covered.**

By optimising the HPB motor's design for low speeds, it is possible to increase the break out torque and low speed mechanical efficiency performance.

All figures given in Section 2-1 Performance Data are still valid when selecting this feature.

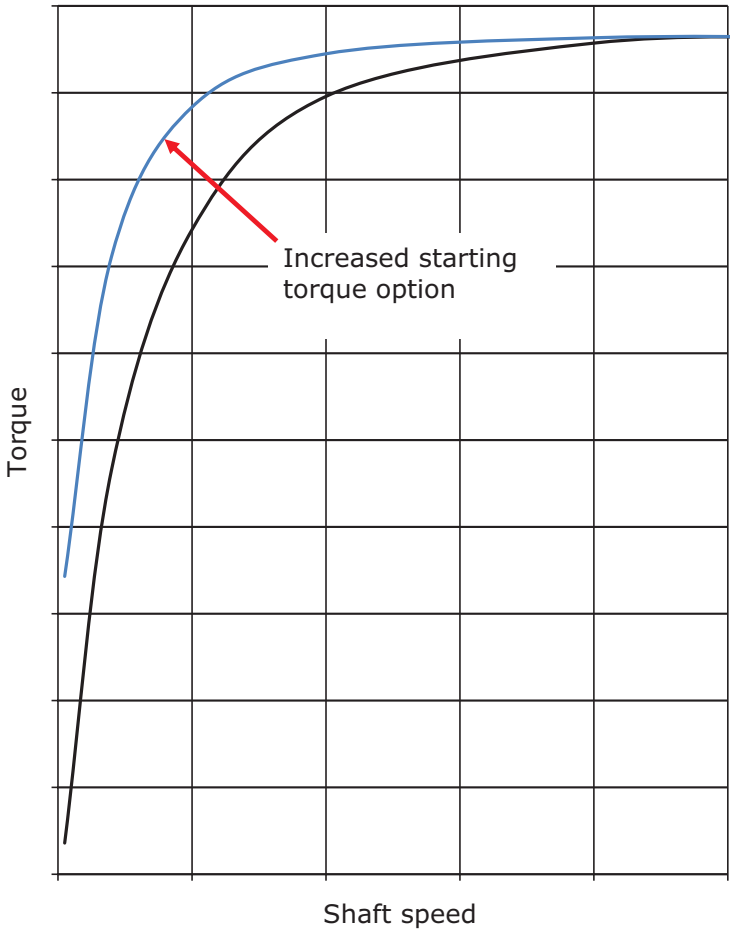

# 2-12 Special Features (cont)

## Increased Starting Torque (cont)

### Volumetric Performance

In order to achieve increased torque at low speeds the volumetric characteristics of the motor performance are changed.

When calculating leakage and volumetric efficiency use the constants shown here in place of those given for the standard motor in Section 2-1.

| Motor Type | Displacement | Zero Speed Constant | Speed Constant | Creep Speed Constant | Crankcase Leakage Constant |
|---|---|---|---|---|---|
| | cc/rev | K1 | K2 | K3 | K4 |
| HPB125 | 2,050 | 12.86 | 38.50 | 4.55 | 11.01 |
| HPB150 | 2,470 | 12.86 | 38.50 | 3.78 | 11.01 |
| HPB200 | 3,087 | 12.86 | 38.50 | 3.02 | 11.01 |
| HPB270 | 4,310 | 13.26 | 37.30 | 2.41 | 12.26 |
| HPB325 | 5,310 | 13.26 | 40.00 | 2.08 | 12.26 |

### Applicable to:

| HPB 060/ 080 | HPB 100 | HPB 125 | HPB 150/200 | HPB 270 | HPB 325 |
|---|---|---|---|---|---|
| ● | ● | ● | ● | ● | ● |

# 2-12 Special Features (cont)

## Anti-Clockwise Rotation

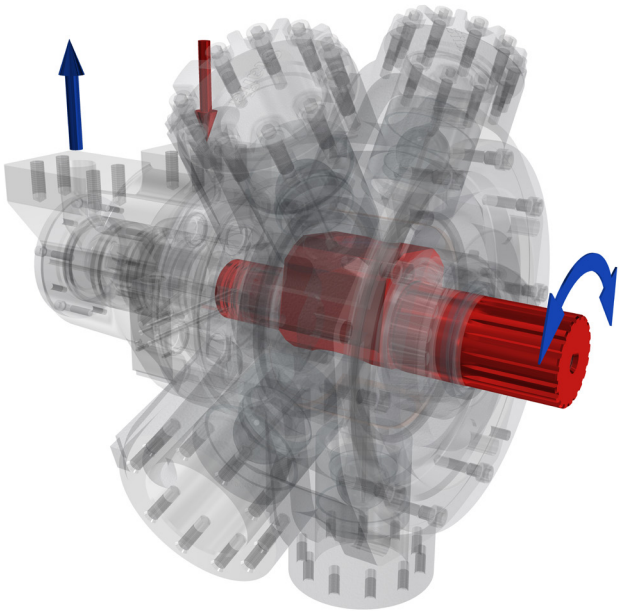

### Description:

> Reduce installation complexity

> Standardise equipment designs

### Technical Information

All HPB motors can be specified with an anti-clockwise rotation valve configuration. All performance and volumetric characteristics remain unchanged.

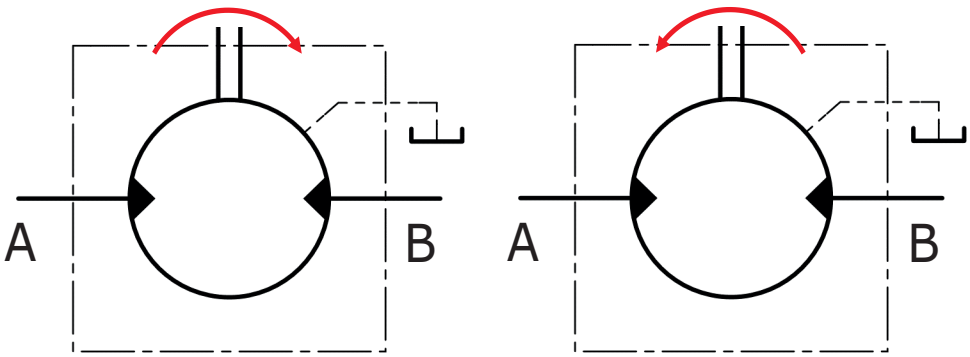


Standard motor

Anti-clockwise motor

### Applicable to:

| HPB 060/ 080 | HPB 100 | HPB 125 | HPB 150/200 | HPB 270 | HPB 325 |
|---|---|---|---|---|---|
| ● | ● | ● | ● | ● | ● |

# 2-12 Special Features (cont)

## Thermal Shock Resistance

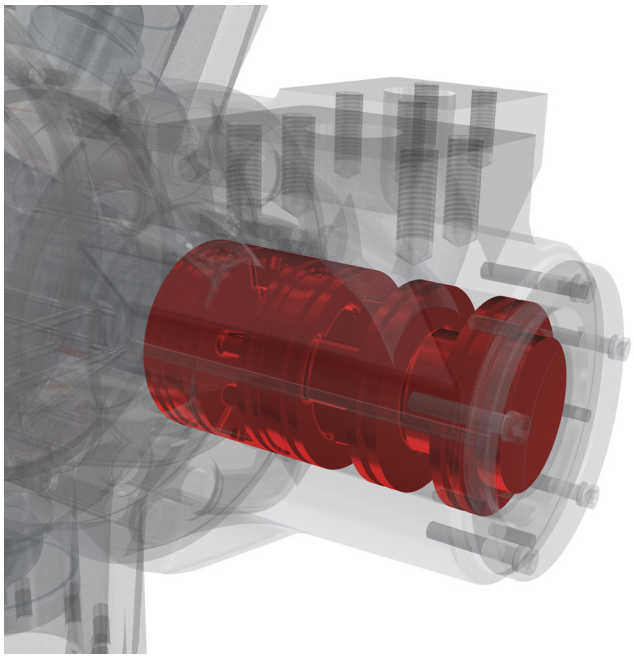

### Description:

> Recommended for cold climates

> Optimised for start-up in freezing temperatures

> Engineered for total peace of mind

### Technical Information

Starting up a cold system with warm hydraulic fluid is a known cause of heavy wear and potential seizure of hydraulic machinery. To minimise this potential risk, the HPB motor can be configured to combat thermal shocks to give complete peace of mind when operating in very cold climates.

### Volumetric Performance

In order to provide thermal shock resistance the volumetric characteristics of the motor performance are changed. When calculating leakage and volumetric efficiency use the constants shown in Section 2-12 in place of those given for the standard motor in Section 2-1.

All figures given in Section 2-1 Performance Data are still valid when selecting this feature.

**Note:**
When operating at low temperature, consideration must be given to the guidance notes in Section 2-8 Motor Operation at Low Temperature.

# 2-12 Special Features (cont)

## Thermal Shock Resistance (cont)

| Motor Type | Geometric Displacement | Zero Speed Constant | Speed Constant | Creep Speed Constant | Crankcase Leakage Constant |
|---|---|---|---|---|---|
| | cc/rev | K1 | K2 | K3 | K4 |
| HPB060 | 983 | 11.10 | 45.70 | 11.38 | 7.90 |
| HPB080 | 1,344 | 11.10 | 45.70 | 8.30 | 7.90 |
| HPB100 | 1,600 | 11.10 | 45.70 | 6.99 | 7.90 |
| HPB125 | 2,050 | 7.70 | 38.50 | 3.78 | 4.25 |
| HPB150 | 2,470 | 7.80 | 38.50 | 3.52 | 4.25 |
| HPB200 | 3,087 | 7.98 | 38.50 | 2.61 | 4.25 |
| HPB270 | 4,310 | 8.38 | 37.30 | 1.91 | 6.00 |
| HPB325 | 5,310 | 8.38 | 40.00 | 1.65 | 6.00 |

**Applicable to:**

| HPB 060/ 080 | HPB 100 | HPB 125 | HPB 150/200 | HPB 270 | HPB 325 |
|---|---|---|---|---|---|
| ● | ● | ● | ● | ● | ● |

# 2-12 Special Features (cont)

## Drain Port Adaptors

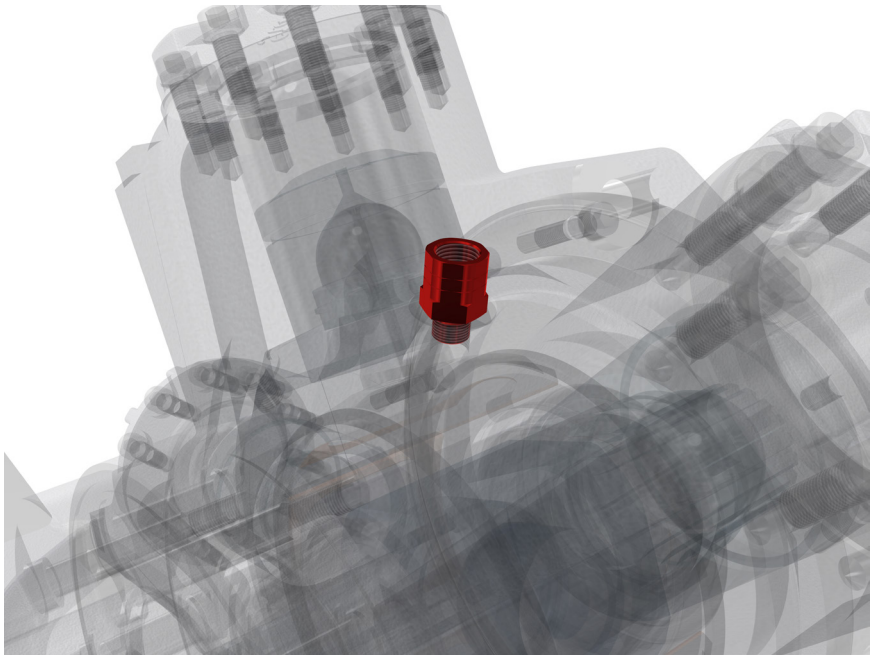

### Description:

> Improves manufacturing logistics

> Motor supplied ready for connection to ½" BSPP male fitting

### Technical Information

| Motor Type | Adaptor Supplied |
|---|---|
| HPB060 | ¾" UNF 2B to ½" BSPP |
| HPB080 | ¾" UNF 2B to ½" BSPP |
| HPB100 | ¾" UNF 2B to ½" BSPP |
| HPB125 | ¾" UNF 2B to ½" BSPP |

| Motor Type | Adaptor Supplied |
|---|---|
| HPB150 | ¾" UNF 2B to ½" BSPP |
| HPB200 | ¾" UNF 2B to ½" BSPP |
| HPB270 | ¾" UNF 2B to ½" BSPP |
| HPB325 | ¾" UNF 2B to ½" BSPP |

One or two drain adaptors can be supplied.

### Applicable to:

| HPB 060/ 080 | HPB 100 | HPB 125 | HPB 150/200 | HPB 270 | HPB 325 |
|---|---|---|---|---|---|
| ● | ● | ● | ● | ● | ● |

# 2-12 Special Features (cont)

## Mounting Hole Diameter

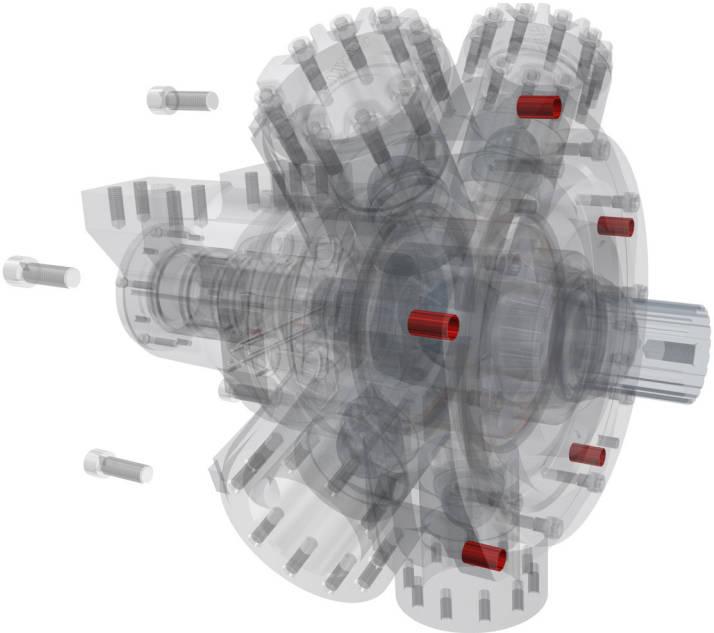

### Description:

> Matching mounting holes to bolts

> Φ21mm and Φ22mm options available

### Technical Information

In different markets, different bolt standards are adopted which may not be best suited to the standard Φ20mm mounting hole diameter on the HPB motors. To give a correct fit and optimum installation, Φ21mm or Φ22mm holes can be selected on larger frame sizes.

### Applicable to:

| HPB 060/ 080 | HPB 100 | HPB 125 | HPB 150/200 | HPB 270 | HPB 325 |
|---|---|---|---|---|---|
| ● | ● | ● | ● | ● | ● |

# 2-12 Special Features (cont)

## Marine Specification Primer Paint

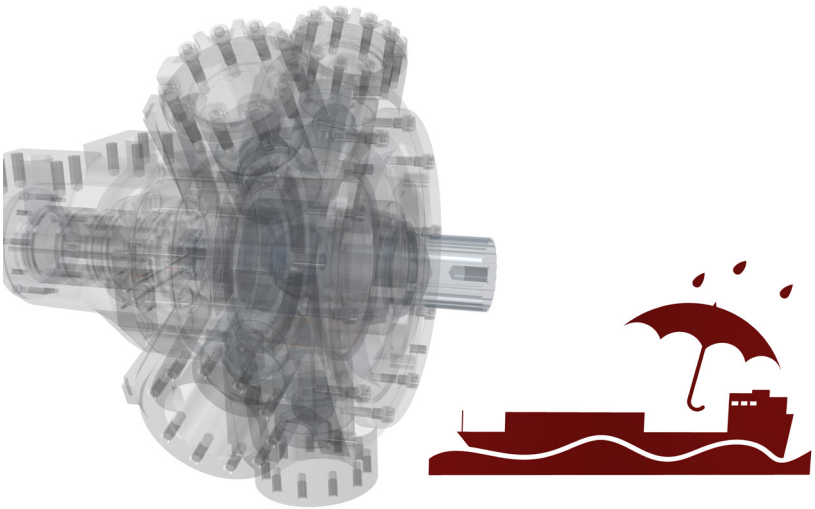

### Description:

> Improves corrosion and water resistance of the finishing system

> Excellent adhesion strength

> Recommended for marine applications

### Technical Information

| | |
|---|---|
| Colour | Red oxide |
| Type | Single pack epoxy etching primer |
| Standard | BS 3900 part A 8 |
| Dry film thickness | > 12µm |

### Applicable to:

| HPB 060/ 080 | HPB 100 | HPB 125 | HPB 150/200 | HPB 270 | HPB 325 |
|---|---|---|---|---|---|
| ● | ● | ● | ● | ● | ● |

# 2-12 Special Features (cont)

## Marine-Style Cylinder Head

### Description:

> Reduces water entrapment

> Improves corrosion resistance

> Aids paint coverage

When top-coat paint solutions are applied to any surface, the coverage can easily become sub-optimal for very complex shapes. As the protection of the Staffa motor's external surfaces is critical in corrosive environments, the marine-style cylinder head, which is geometrically simplified in comparison to the standard design, can be specified for all HMF motors to aid in the optimal application of the top-coat paint solution.

### Technical Information

No installation dimensions or after-market parts are affected when selecting this option as it is completely interchangeable with the standard cylinder head. Existing motors may be upgraded to use these cylinder heads without the need for any other replacement parts.

### Applicable to:

| HPB 060/ 080 | HPB 100 | HPB 125 | HPB 150/200 | HPB 270 | HPB 325 |
|---|---|---|---|---|---|
| ● | ● | ● | ● | ● | ● |

# 2-12 Special Features (cont)

## Tj speed sensor technical specification

The Tj speed sensor is a hall effect dual channel speed probe that can provide feedback of both speed and direction.

| | |
|---|---|
| Signal Outputs: | Square wave plus directional signal |
| Power Supply: | 8 to 32V @ 40mA |
| Protection Class: | IP68 |
| Output Frequency: | 16 pulses/revolution |

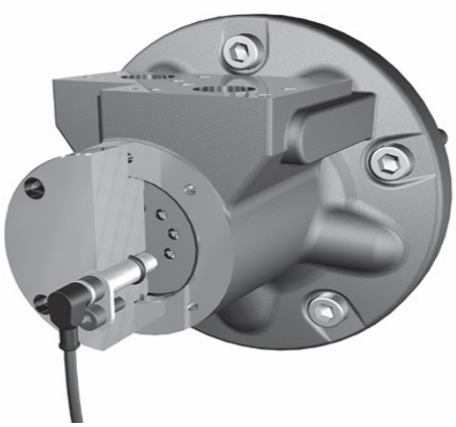

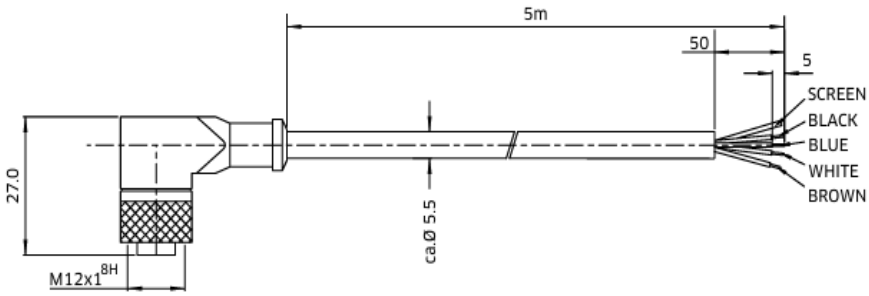


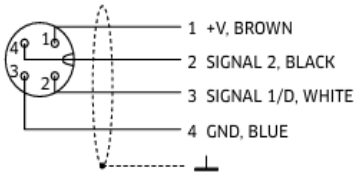


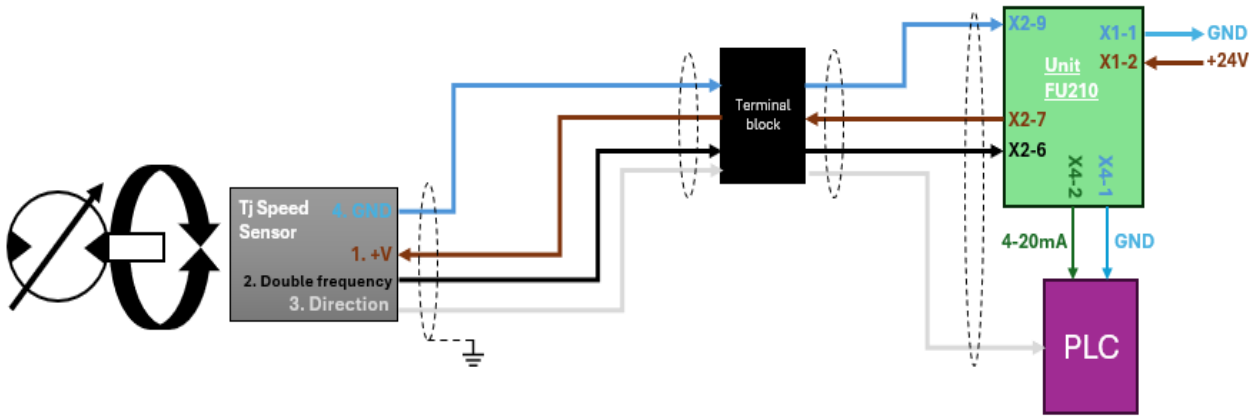

# 2-12 Special Features (cont)

## Ts readout option

The Ts option consists of the Tj speed sensor together with the optional FU210 output module.

The addition of the FU210 module provides a software configured single channel tachometer and relay with a /4-20mA analogue current output which comes pre-programmed with the motor.

For more in-depth information please contact KPM UK.

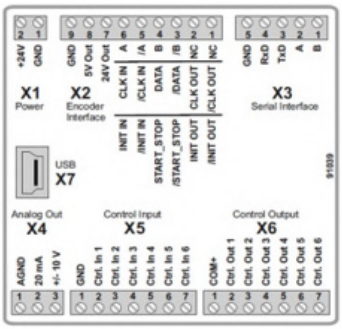


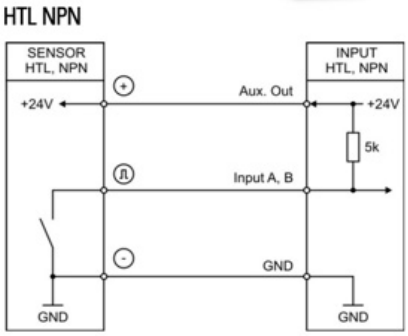

## Installation Details

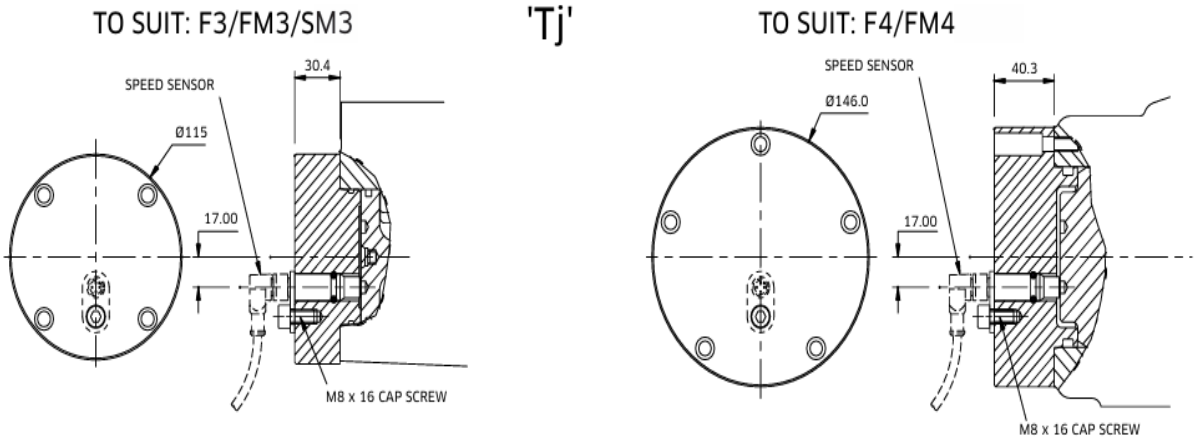

# 3 Dimensions

## 3-1 HPB060/080

### 'P', 'S' & 'Z' Shafts

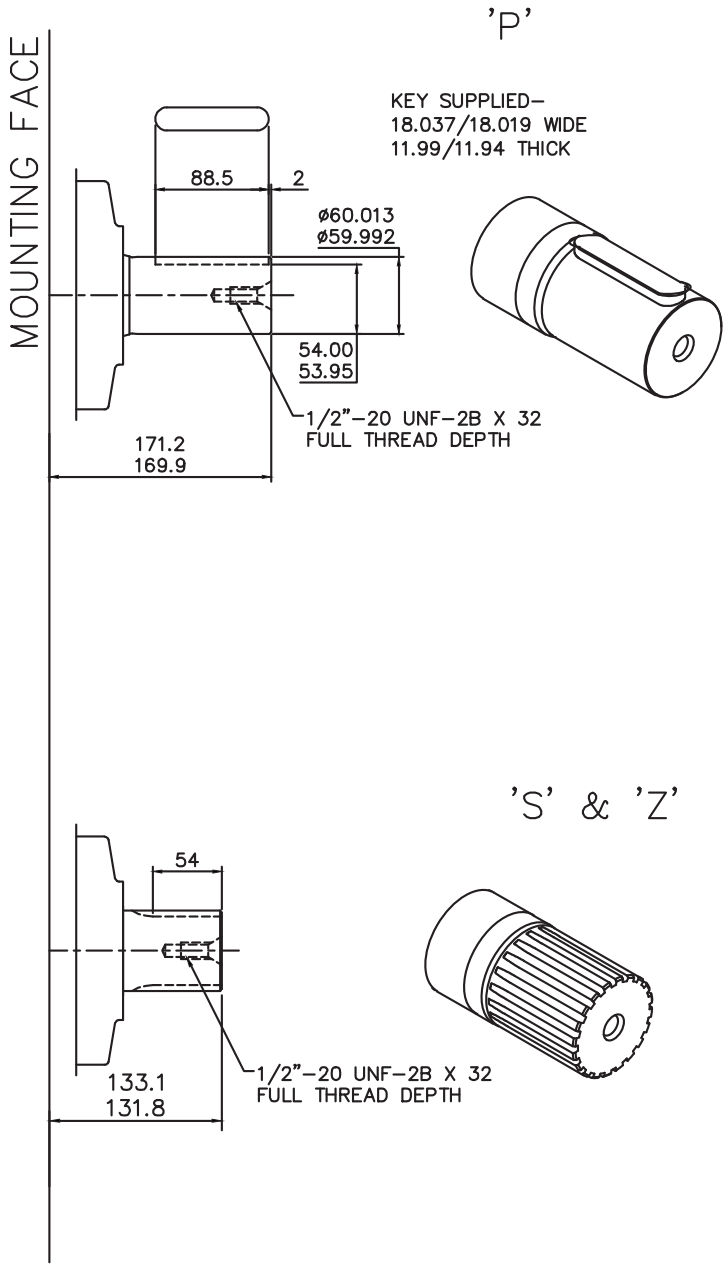


SPLINE DATA

| 'S' | |
|---|---|
| TO BS 3550 (ANSI B92.1 CLASS 5) | |
| FLAT ROOT SIDE FIT, CLASS 1 | |
| PRESSURE ANGLE | 30° |
| NUMBER OF TEETH | 14 |
| PITCH | 6/12 |
| MAJOR DIAMETER | 62.553/62.425 |
| FORM DIAMETER | 55.052 |
| MINOR DIAMETER | 54.084/53.525 |
| PIN DIAMETER | 8.128 |
| DIAMETER OVER PINS | 71.593/71.544 |

| 'Z' |
|---|
| DIN 5480 W70 x 3 x 30 x 22 x 7h |

# 3-1 HPB060/080 (cont)

## 'T' & 'Q' Shafts

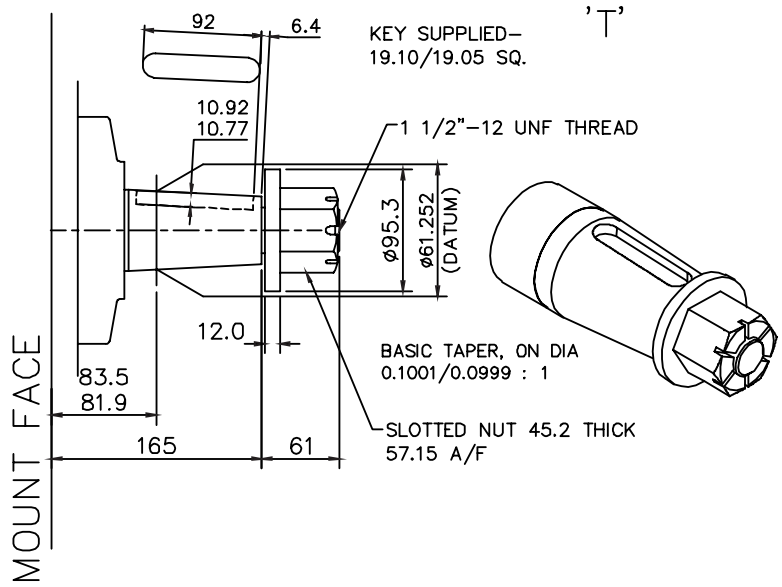


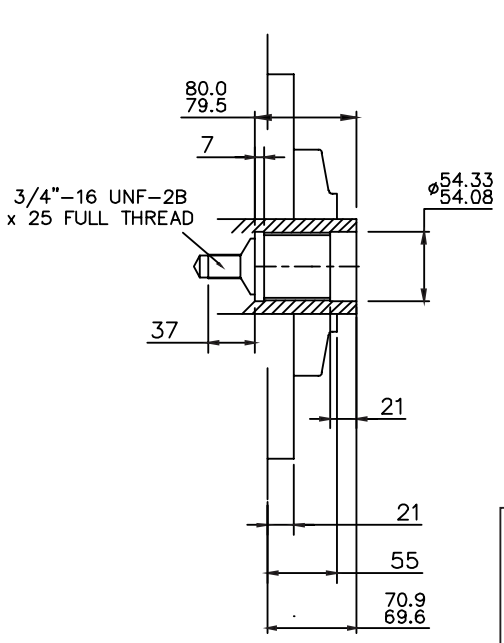


| SPLINE DATA | |
|---|---|
| TO BS 3550 | |
| FLAT ROOT SIDE FIT | |
| PRESSURE ANGLE | 30° |
| NUMBER OF TEETH | 24 |
| PITCH | 12/24 |
| MAJOR DIAMETER | 53.25/52.92 |
| MINOR DIAMETER | 48.81/48.68 |
| FORM DIAMETER | 52.49 |
| PIN DIAMETER | 3.66 flatted to 3.56 |
| DIMENSION BETWEEN PINS | 45.63/45.55 |

# 3-1 HPB060/080 (cont)

## 'SM3' Valve Housing

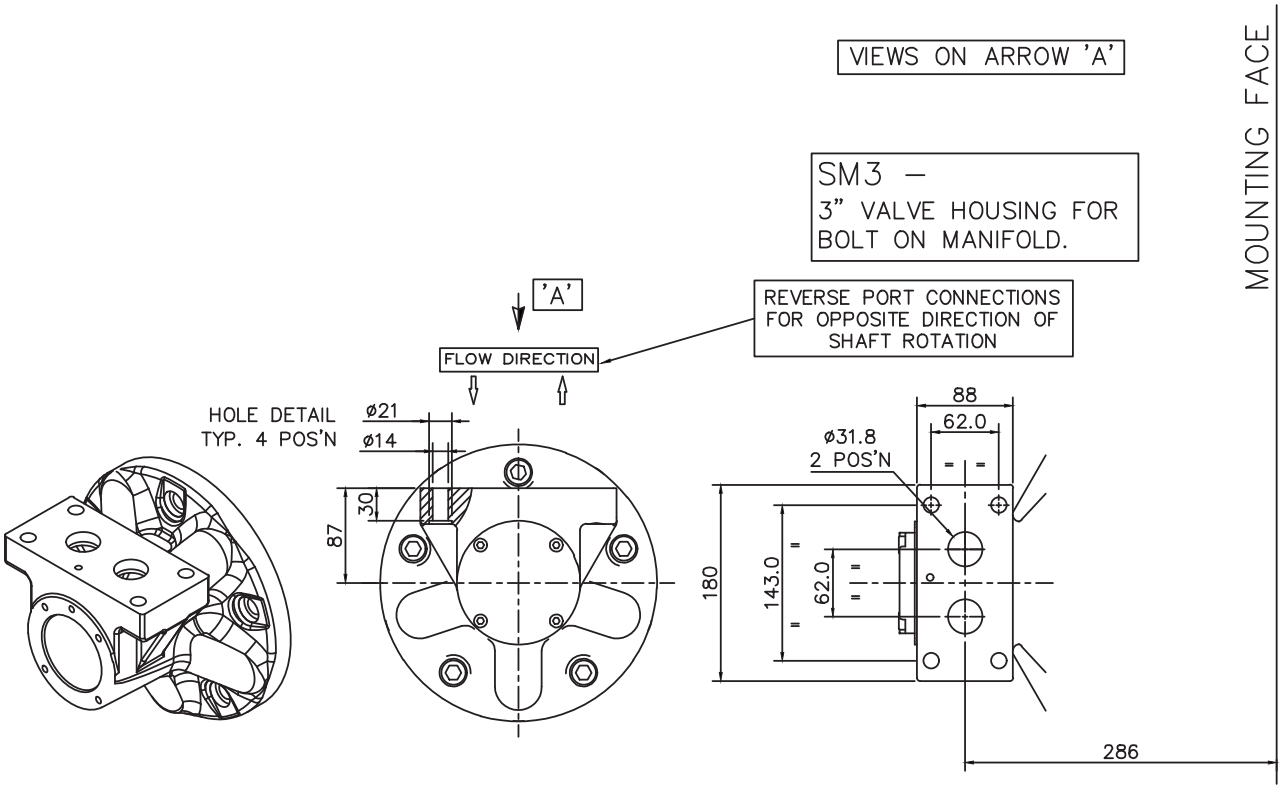

# 3-1 HPB060/080 (cont)

## 'F3' & 'FM3' Valve Housings

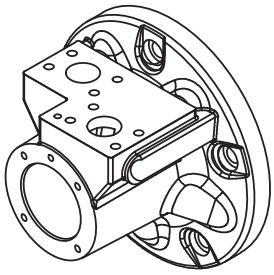

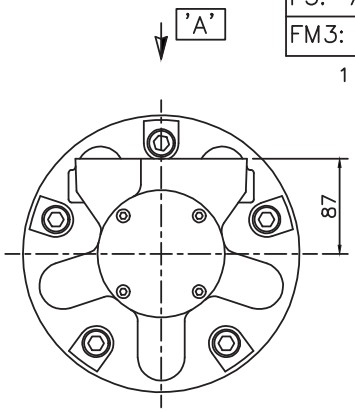


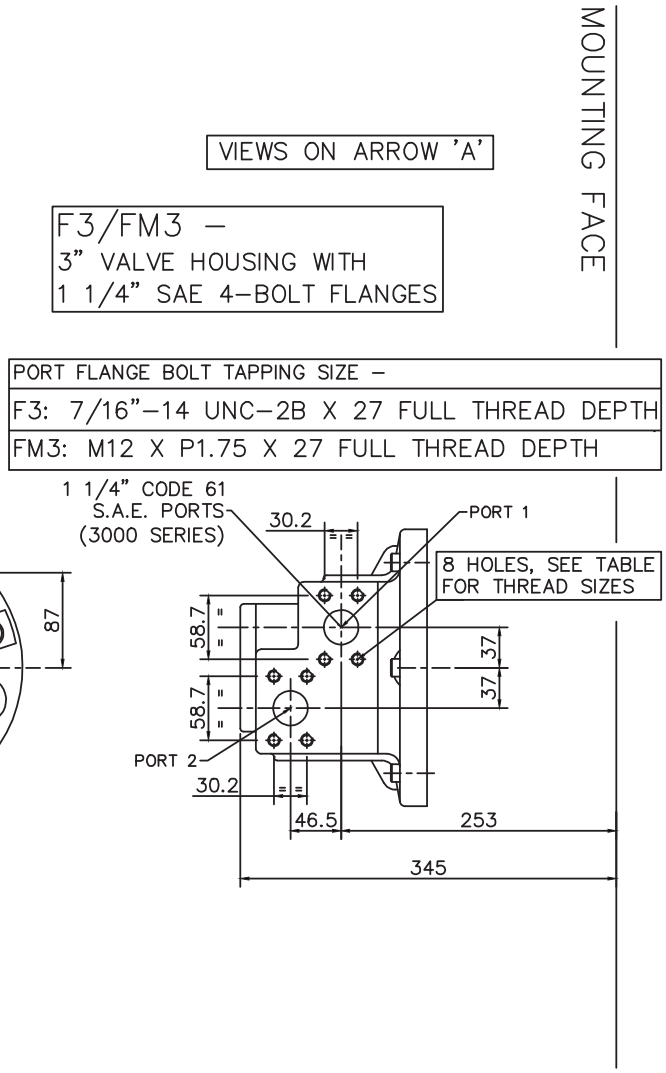

# 3-1 HPB060/080 (cont)

## Installation

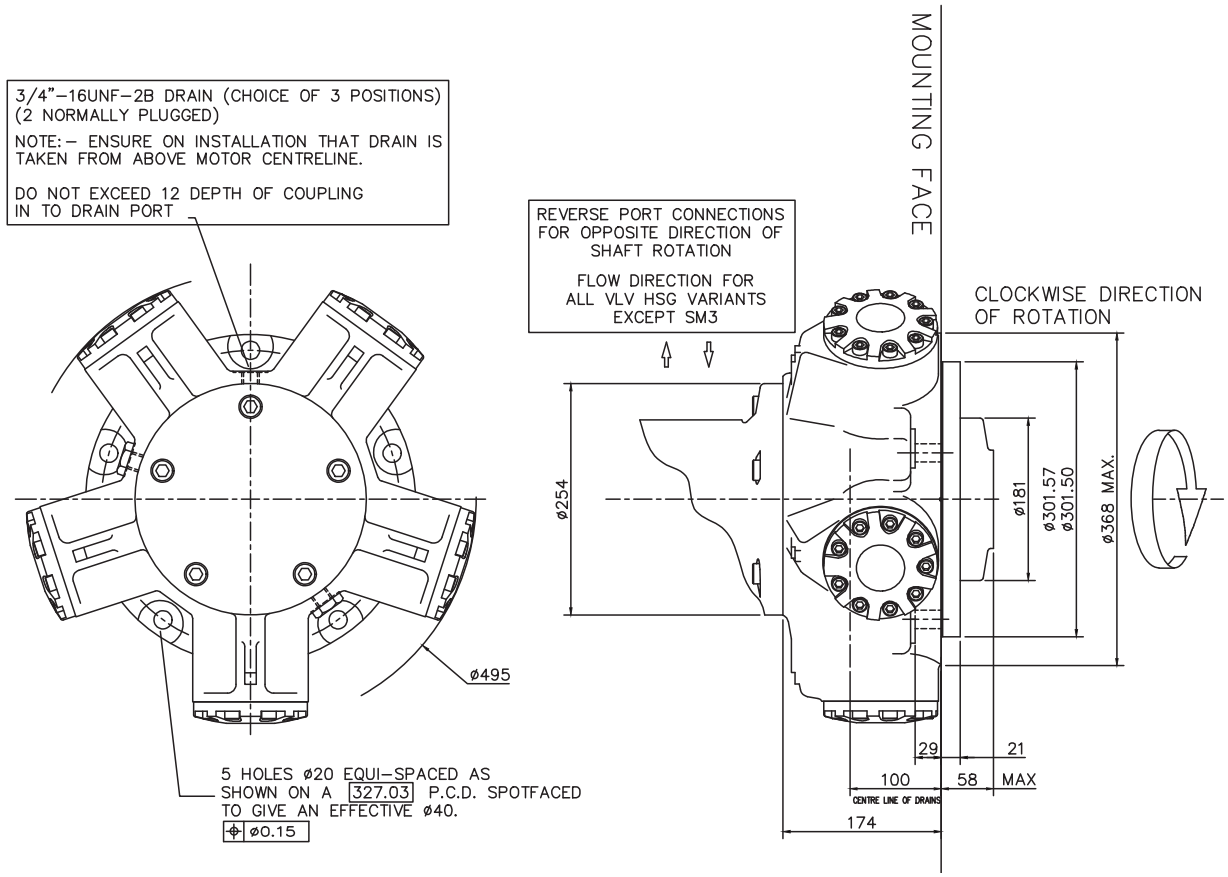

# 3-2 HPB100

## 'P', 'S' & 'Z' Shafts

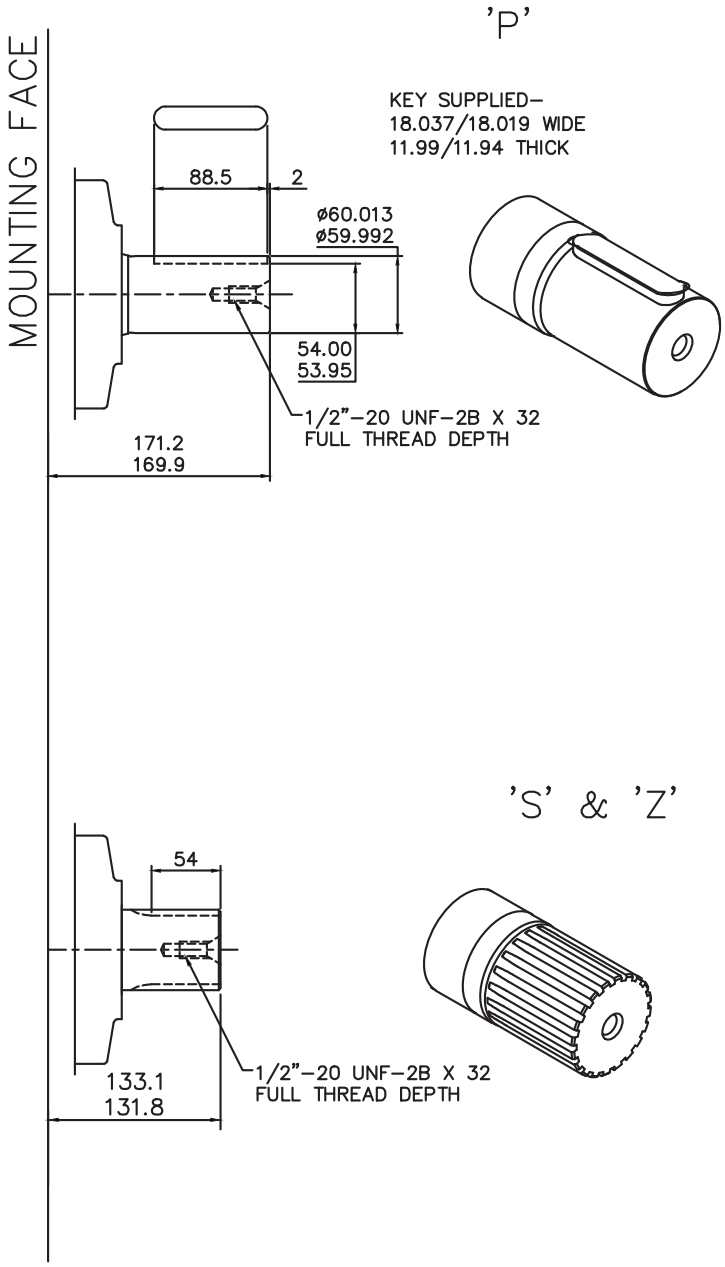


SPLINE DATA

| 'S' | |
|---|---|
| TO BS 3550 (ANSI B92.1 CLASS 5) | |
| FLAT ROOT SIDE FIT, CLASS 1 | |
| PRESSURE ANGLE | 30° |
| NUMBER OF TEETH | 14 |
| PITCH | 6/12 |
| MAJOR DIAMETER | 62.553/62.425 |
| FORM DIAMETER | 55.052 |
| MINOR DIAMETER | 54.084/53.525 |
| PIN DIAMETER | 8.128 |
| DIAMETER OVER PINS | 71.593/71.544 |

| 'Z' |
|---|
| DIN 5480 W70 x 3 x 30 x 22 x 7h |

# 3-2 HPB100 (cont)

## 'T' & 'Q' Shafts

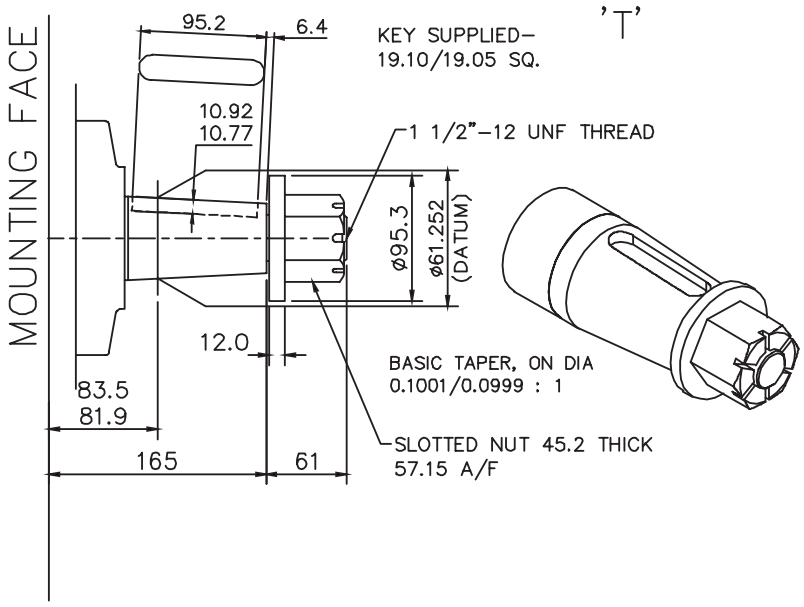


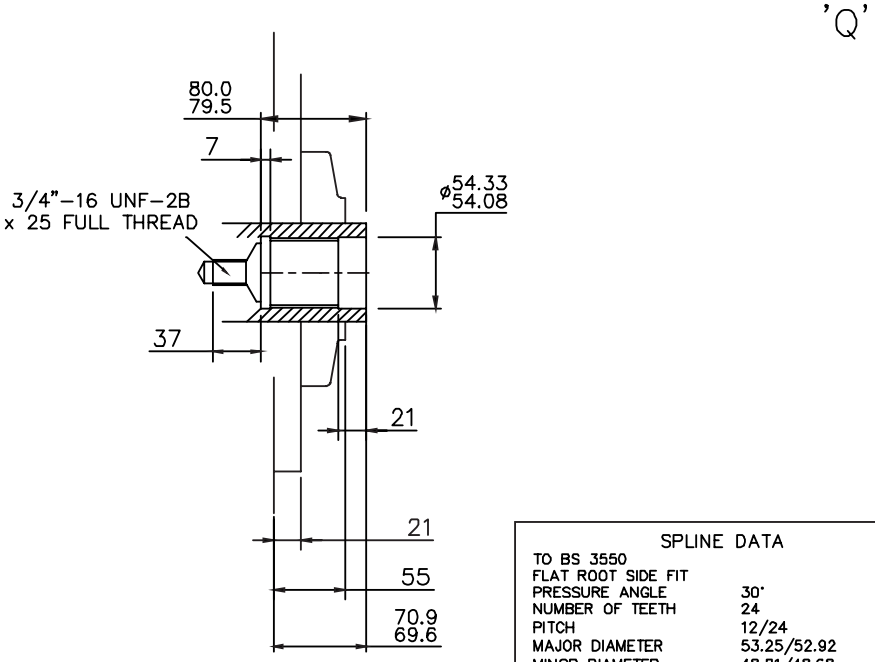


| SPLINE DATA | |
|---|---|
| TO BS 3550 | |
| FLAT ROOT SIDE FIT | |
| PRESSURE ANGLE | 30° |
| NUMBER OF TEETH | 24 |
| PITCH | 12/24 |
| MAJOR DIAMETER | 53.25/52.92 |
| MINOR DIAMETER | 48.81/48.68 |
| FORM DIAMETER | 52.49 |
| PIN DIAMETER | 3.66 flatted to 3.56 |
| DIMENSION BETWEEN PINS | 45.63/45.55 |

# 3-2 HPB100 (cont)

## 'SM3' Valve Housing

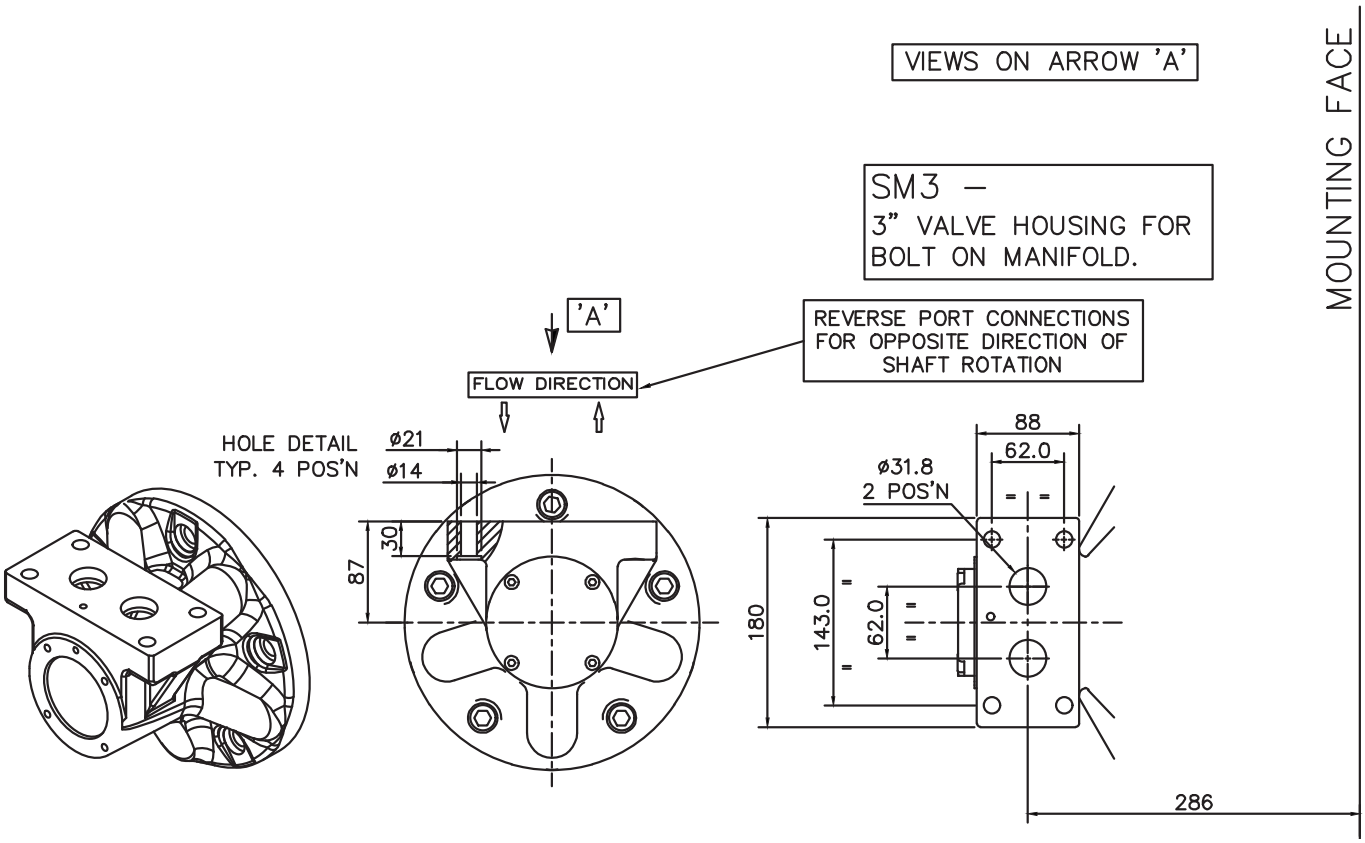

# 3-2 HPB100 (cont)

## 'F3' & 'FM3' Valve Housings

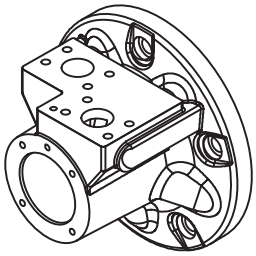

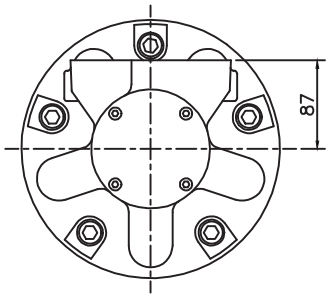


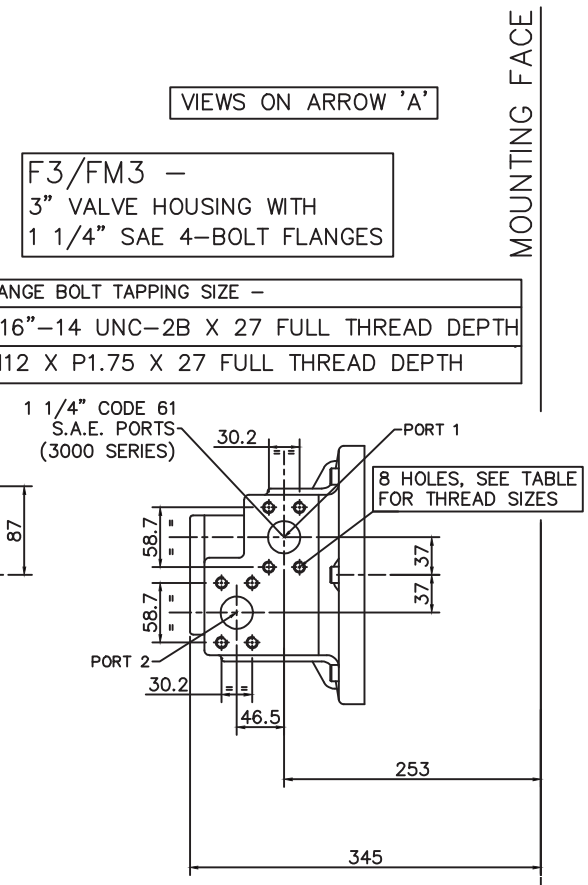


## 'F4' & 'FM4' Valve Housings

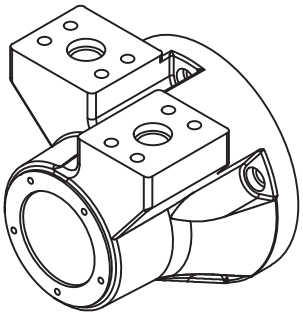

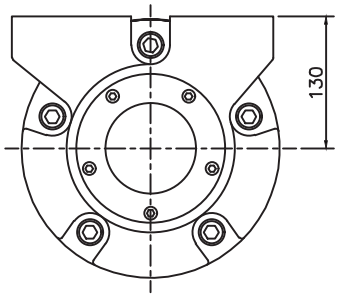


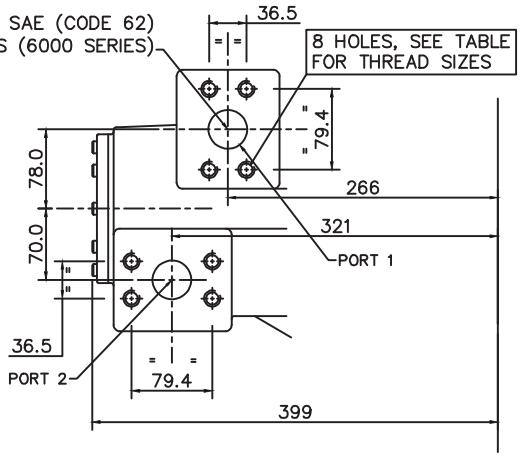

# 3-2 HPB100 (cont)

## Installation

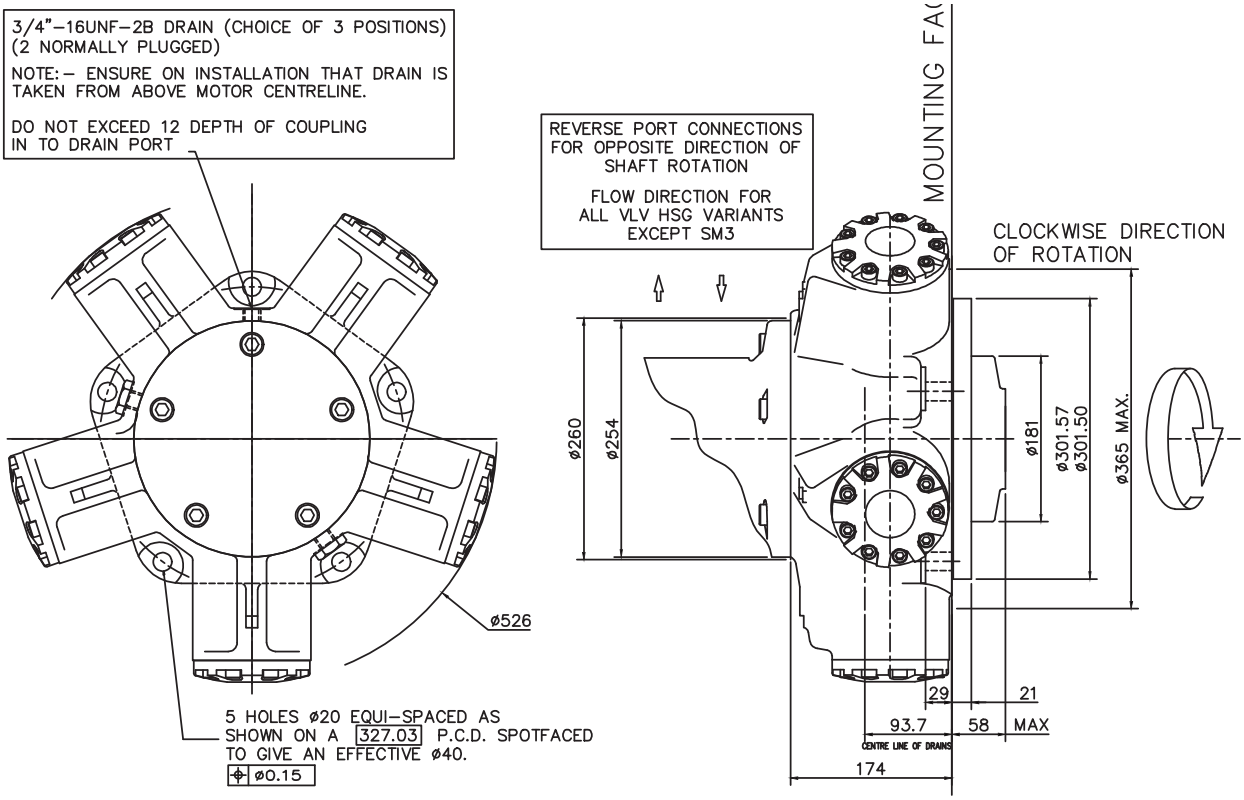

# 3-3 HPB125

## HPB125 - 'P1', 'S3', 'S4' & 'Z3' Shafts

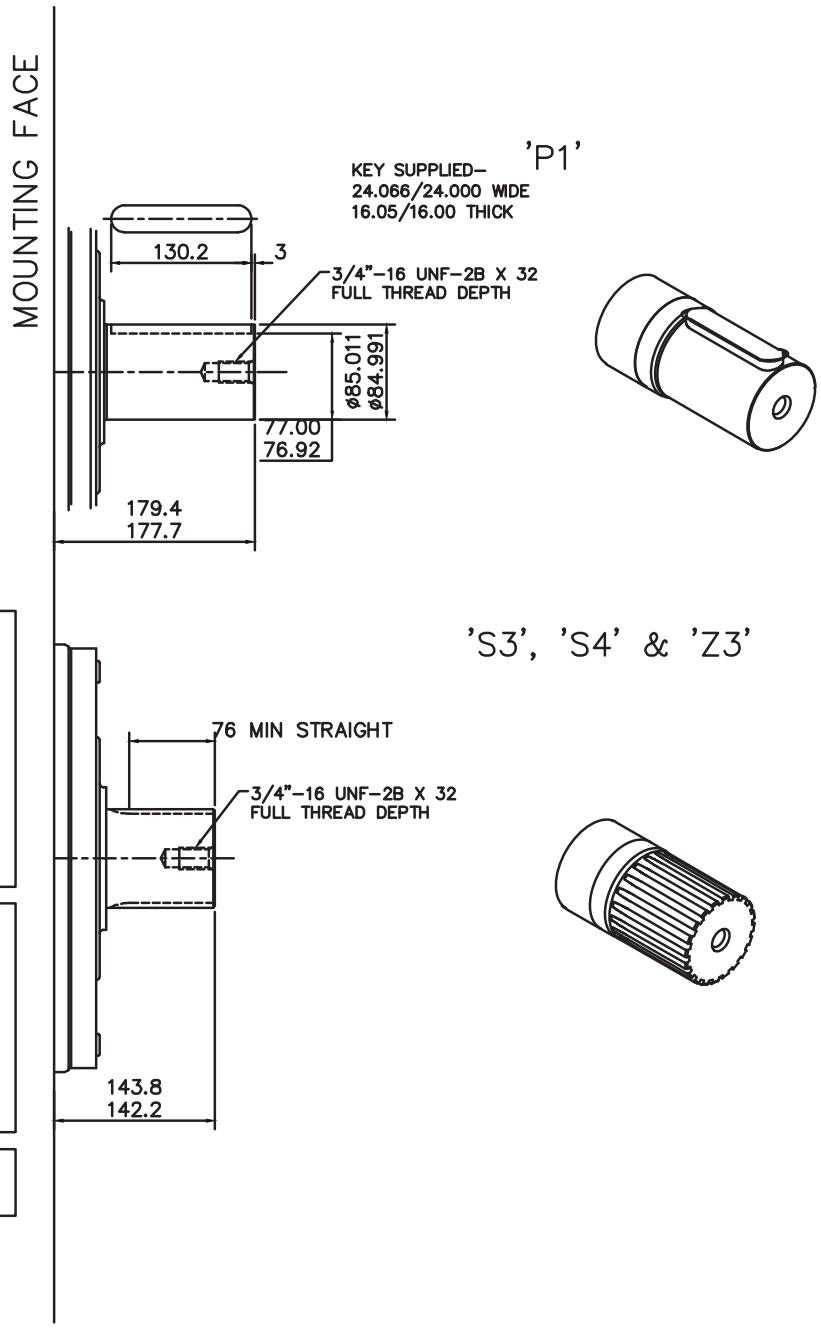


SPLINE DATA

| 'S3' | |
|---|---|
| TO BS 3550 (ANSI B92.1, CLASS 5) | |
| FLAT ROOT SIDE FIT, CLASS 1 | |
| PRESSURE ANGLE | 30° |
| NUMBER OF TEETH | 20 |
| PITCH | 6/12 |
| MAJOR DIAMETER | 87.953/87.825 |
| FORM DIAMETER | 80.264 |
| MINOR DIAMETER | 79.485/78.925 |
| PIN DIAMETER | 8.128 |
| DIAMETER OVER PINS | 97.084/97.030 |

| 'S4' | |
|---|---|
| PRESSURE ANGLE | 20° |
| NUMBER OF TEETH | 16 |
| PITCH | 5/10 |
| MAJOR DIAMETER | 86.360/86.233 |
| FORM DIAMETER | 76.124 |
| MINOR DIAMETER | 74.93/72.39 |
| PIN DIAMETER | 8.636 |
| DIAMETER OVER PINS | 92.710/92.581 |

| 'Z3' |
|---|
| DIN 5480 W85 x 3 x 27 x 7h |

# 3-3 HPB125 (cont)

## HPB125 - 'T' & 'Q' Shafts

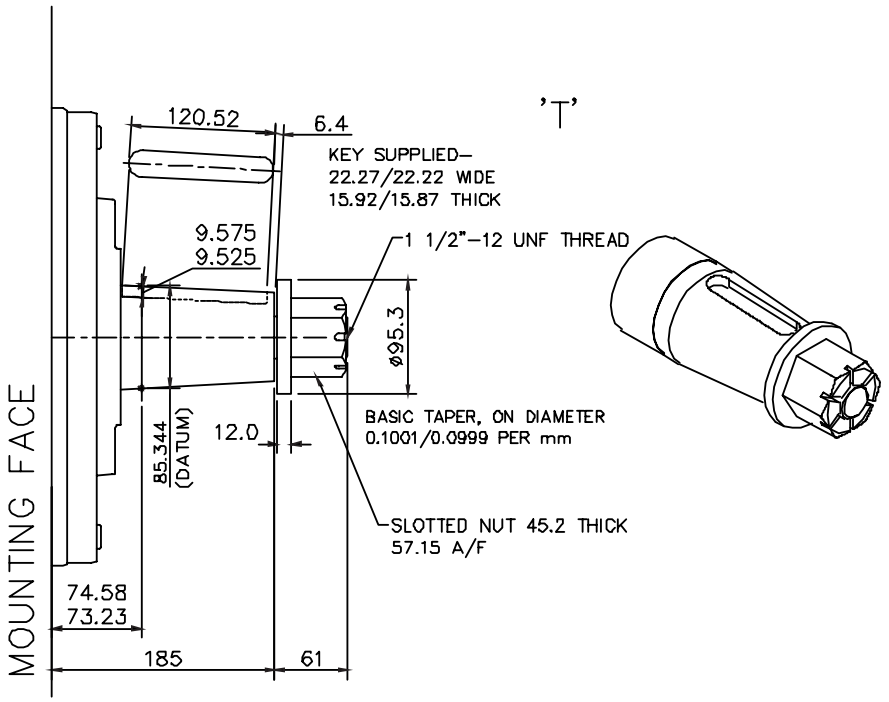


| SPLINE DATA | |
|---|---|
| BS3550 : FLAT ROOT SIDE FIT | |
| NUMBER OF TEETH | 34 |
| PITCH | 12/24 |
| MAJOR DIAMETER | 74.41/74.08 |
| MINOR DIAMETER | 69.98/69.85 |
| PIN DIAMETER | 3.66 flatted to 3.56 |
| DIMENSION BETWEEN PINS | 66.81/66.74 |

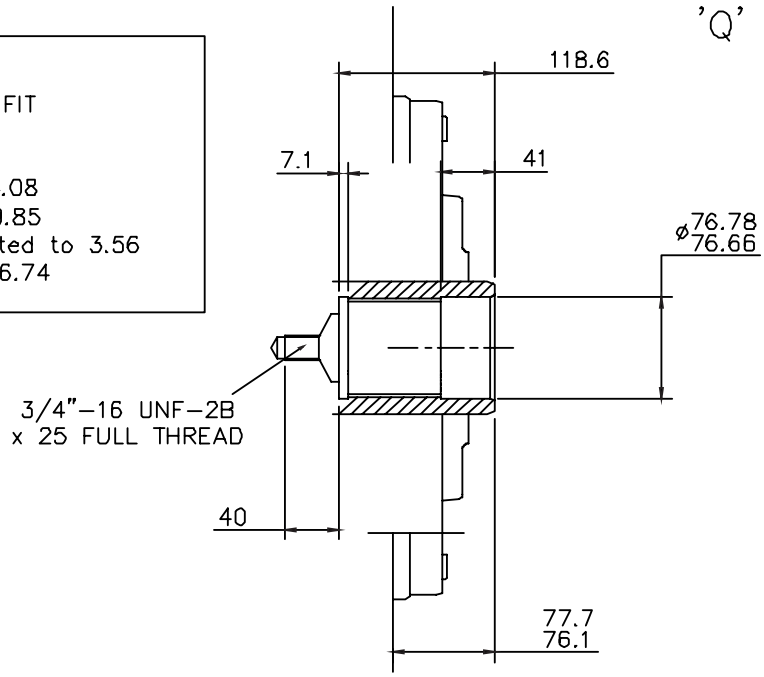

# 3-3 HPB125 (cont)

## HPB125 - 'P2' Shafts

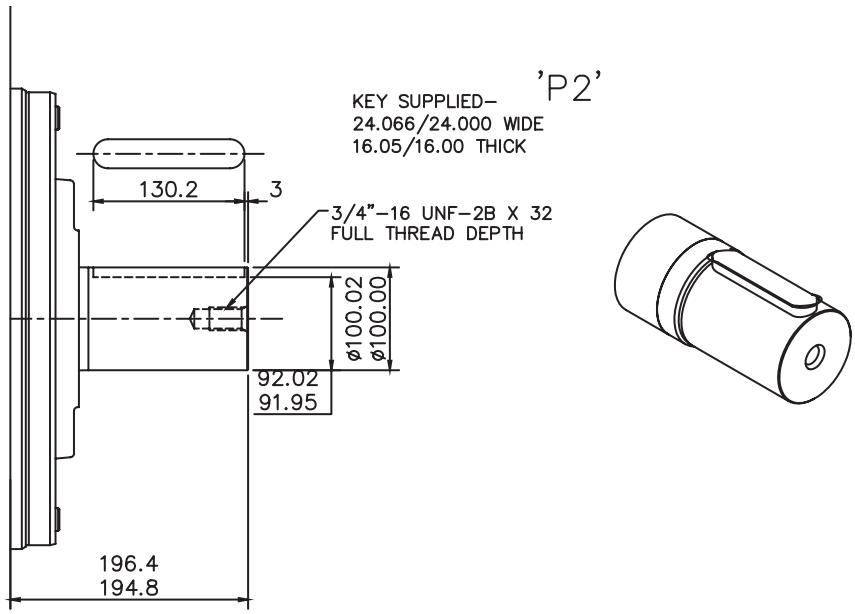

# 3-3 HPB125 (cont)

## HPB125 - 'S5' & 'Z5' Shafts

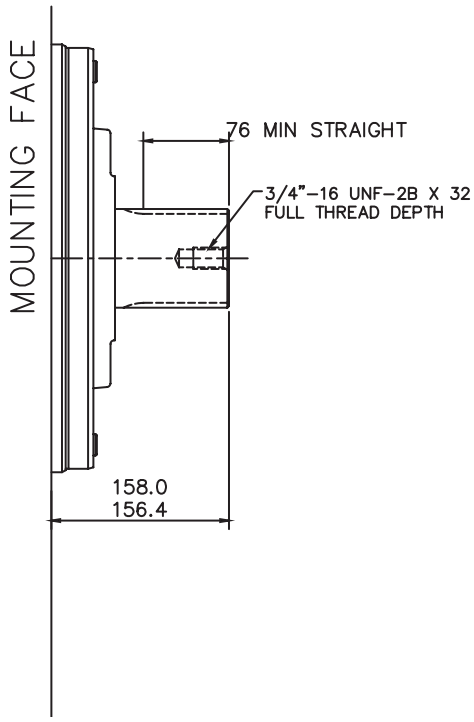


'S5' & 'Z5'

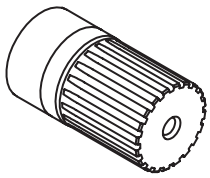

### SPLINE DATA

| 'S5' | |
|---|---|
| PRESSURE ANGLE | 20° |
| NUMBER OF TEETH | 23 |
| PITCH | 6/12 |
| MAJOR DIAMETER | 100.652/100.526 |
| FORM DIAMETER | 92.939 |
| MINOR DIAMETER | 92.184/91.626 |
| PIN DIAMETER | 8.128 |
| DIAMETER OVER PINS | 109.573/109.517 |

| 'Z5' |
|---|
| DIN 5480 W100 x 4 x 24 x 7h |

# 3-3 HPB125 (cont)

## 'SM3' Valve Housing

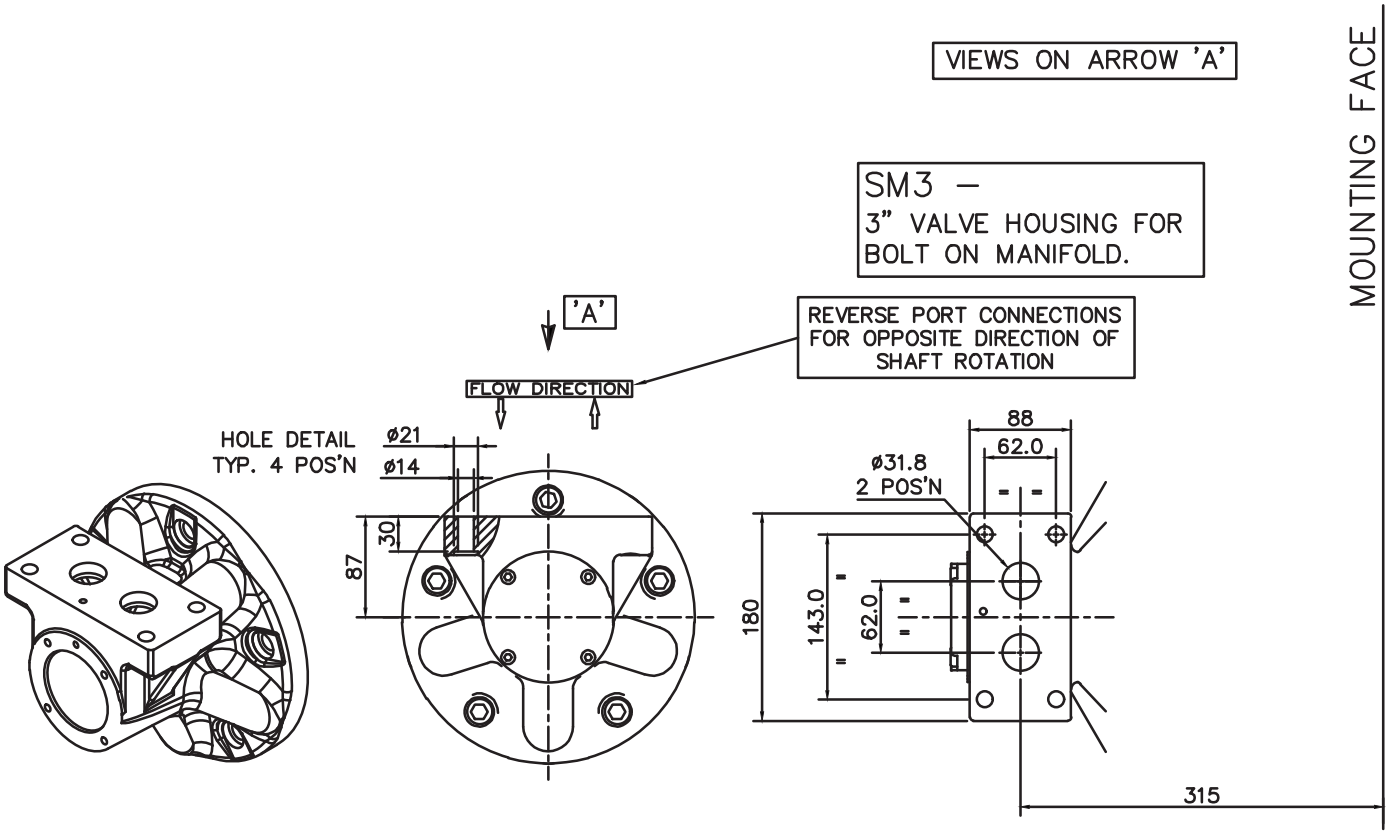

# 3-3 HPB125 (cont)

## 'F3' & 'FM3' Valve Housings

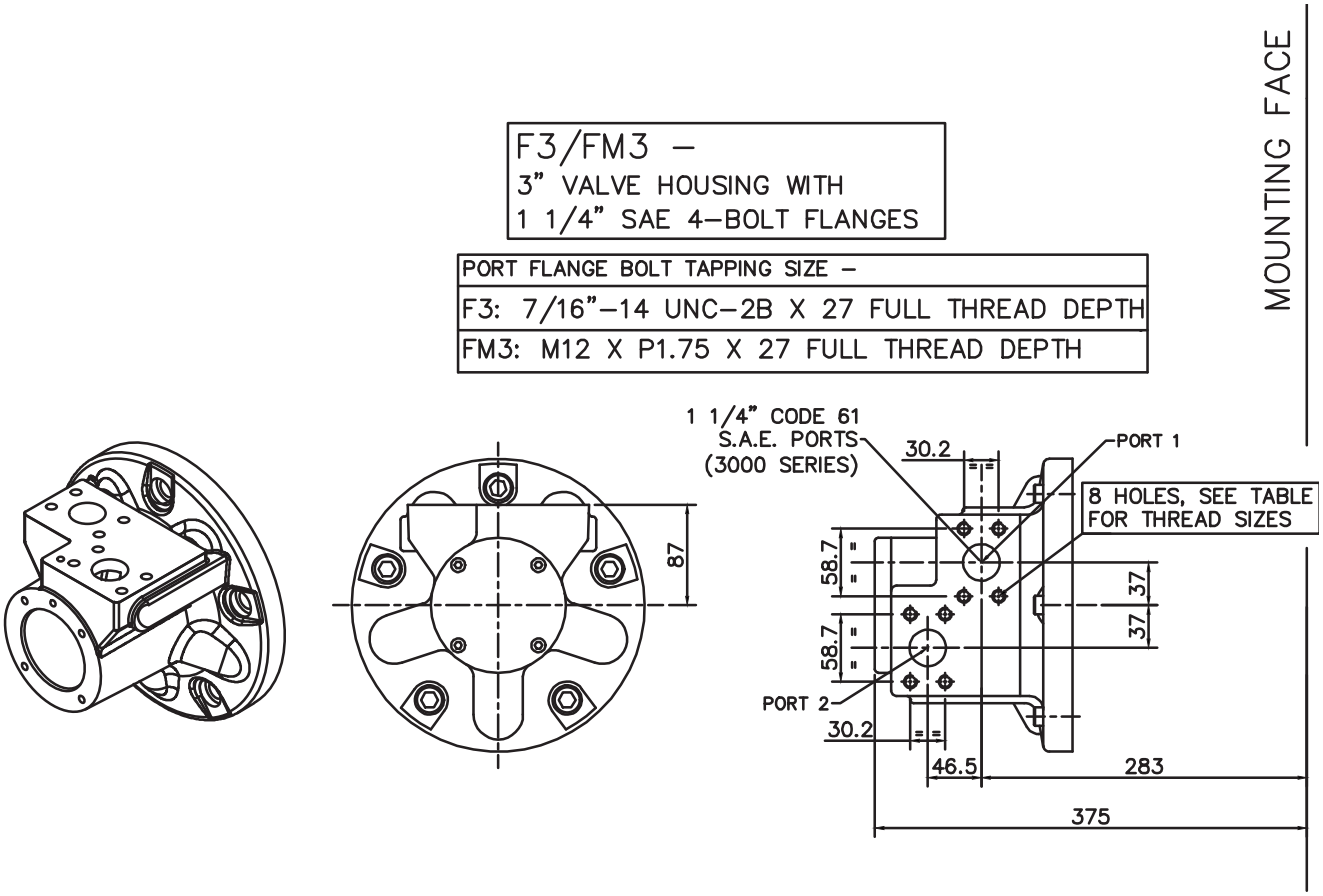

# 3-3 HPB125 (cont)

## 'F4' & 'FM4' Valve Housings

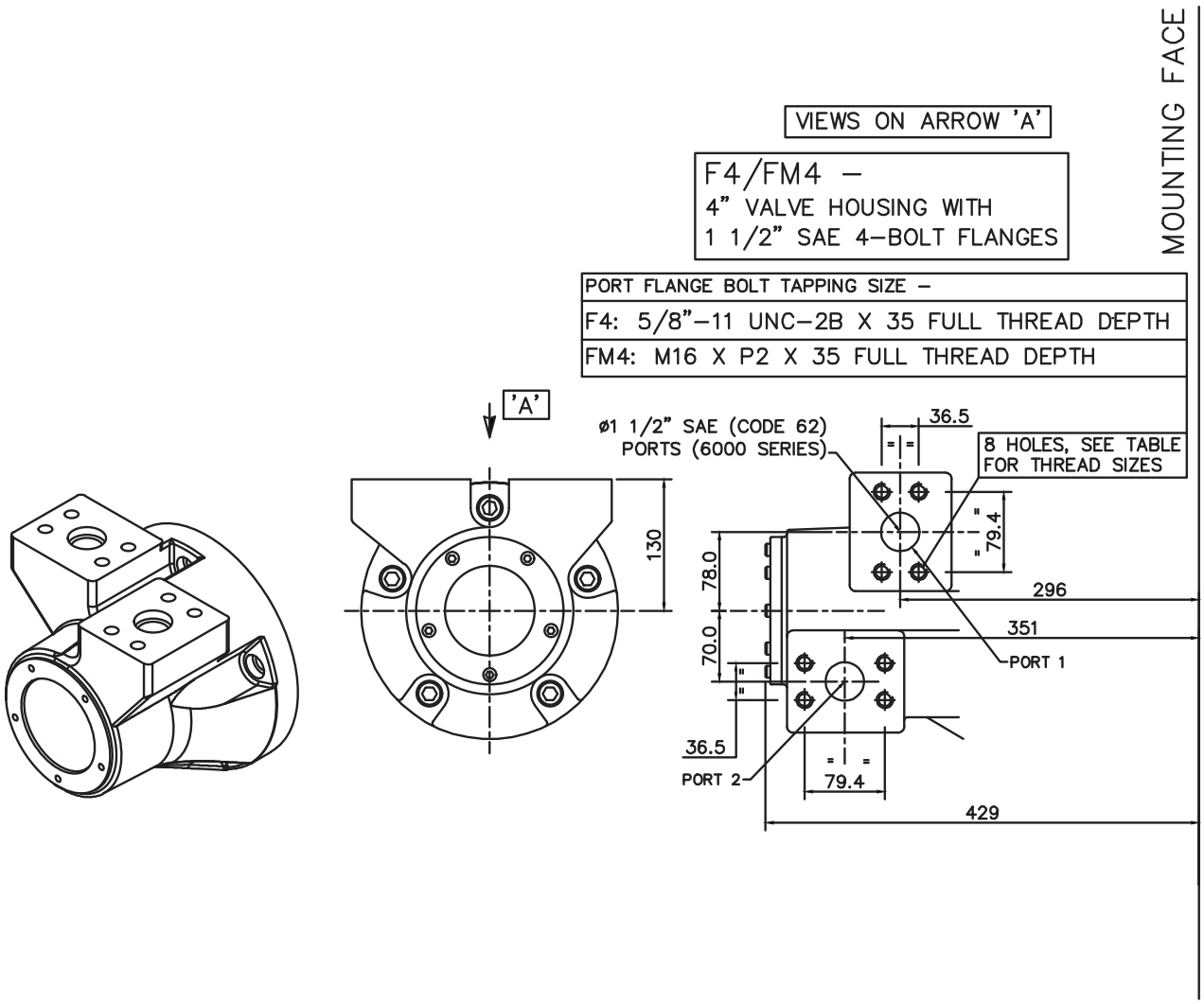

# 3-3 HPB125 (cont)

## Installation

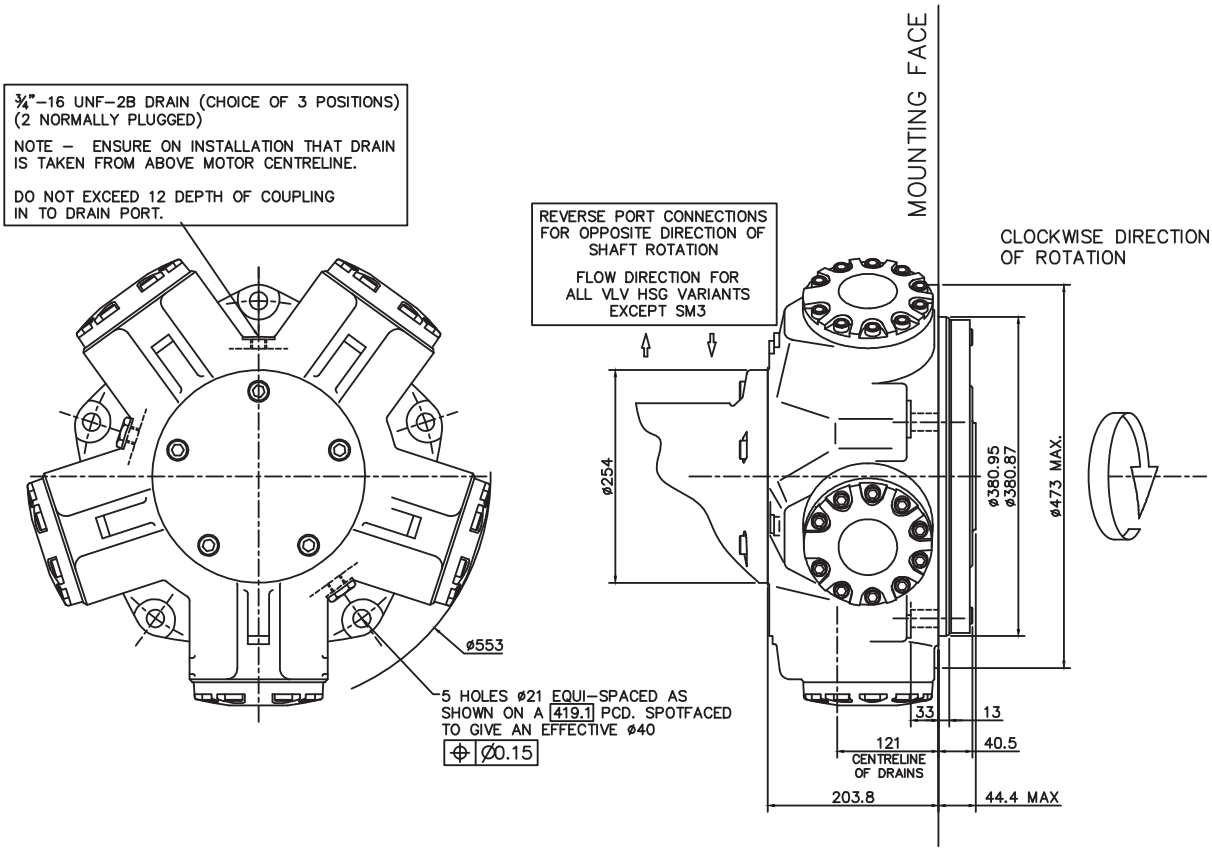


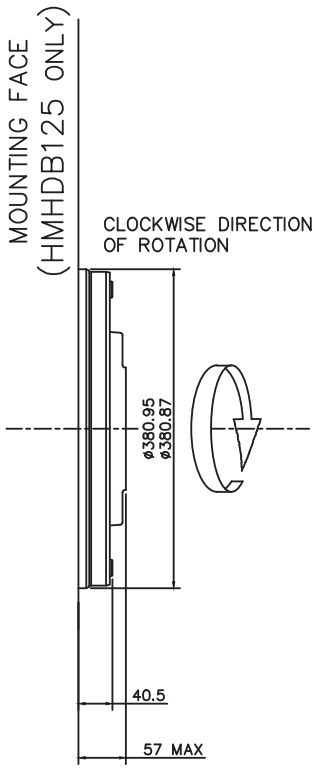

# 3-4 HPB150/200

## HPB150/200 - 'P1', 'S3', 'S4' & 'Z3' Shafts

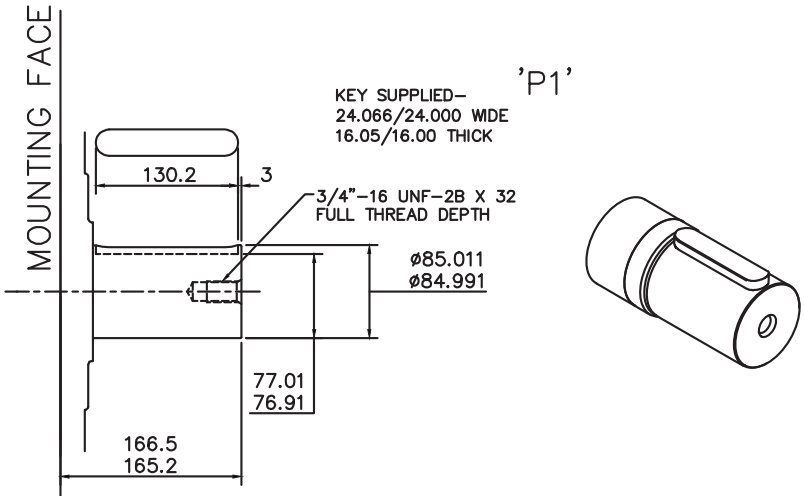


SPLINE DATA

| 'S3' | |
|---|---|
| TO BS 3550 (ANSI B92.1, CLASS 5) | |
| FLAT ROOT SIDE FIT, CLASS 1 | |
| PRESSURE ANGLE | 30° |
| NUMBER OF TEETH | 20 |
| PITCH | 6/12 |
| MAJOR DIAMETER | 87.953/87.825 |
| FORM DIAMETER | 80.264 |
| MINOR DIAMETER | 79.485/78.925 |
| PIN DIAMETER | 8.128 |
| DIAMETER OVER PINS | 97.084/97.030 |

| 'S4' | |
|---|---|
| PRESSURE ANGLE | 20° |
| NUMBER OF TEETH | 16 |
| PITCH | 5/10 |
| MAJOR DIAMETER | 86.360/86.233 |
| FORM DIAMETER | 76.124 |
| MINOR DIAMETER | 74.93/72.39 |
| PIN DIAMETER | 8.636 |
| DIAMETER OVER PINS | 92.710/92.581 |

| 'Z3' |
|---|
| DIN 5480 W85 x 3 x 27 x 7h |

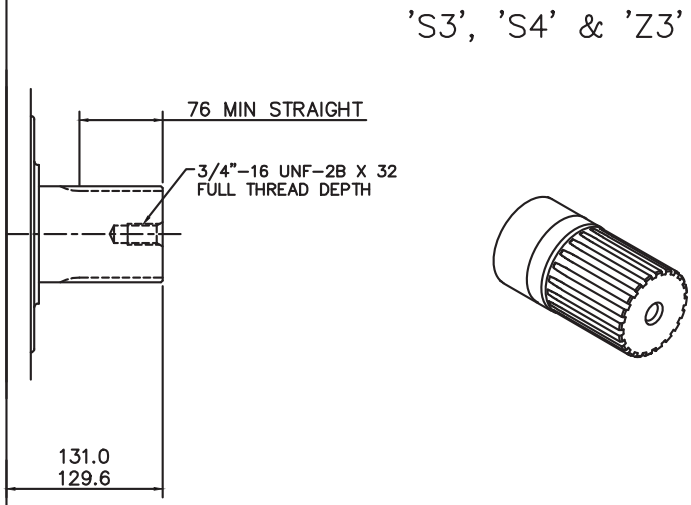

# 3-4 HPB150/200 (cont)

## HPB150/200 - 'T' Shaft

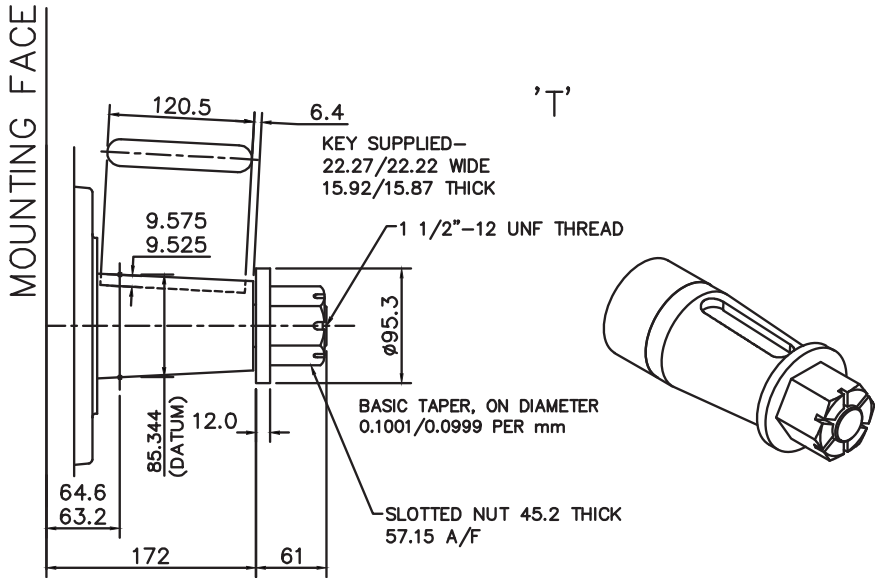

# 3-4 HPB150/200 (cont)

## HPB150/200 - 'P2', 'S5' & 'Z5' Shafts

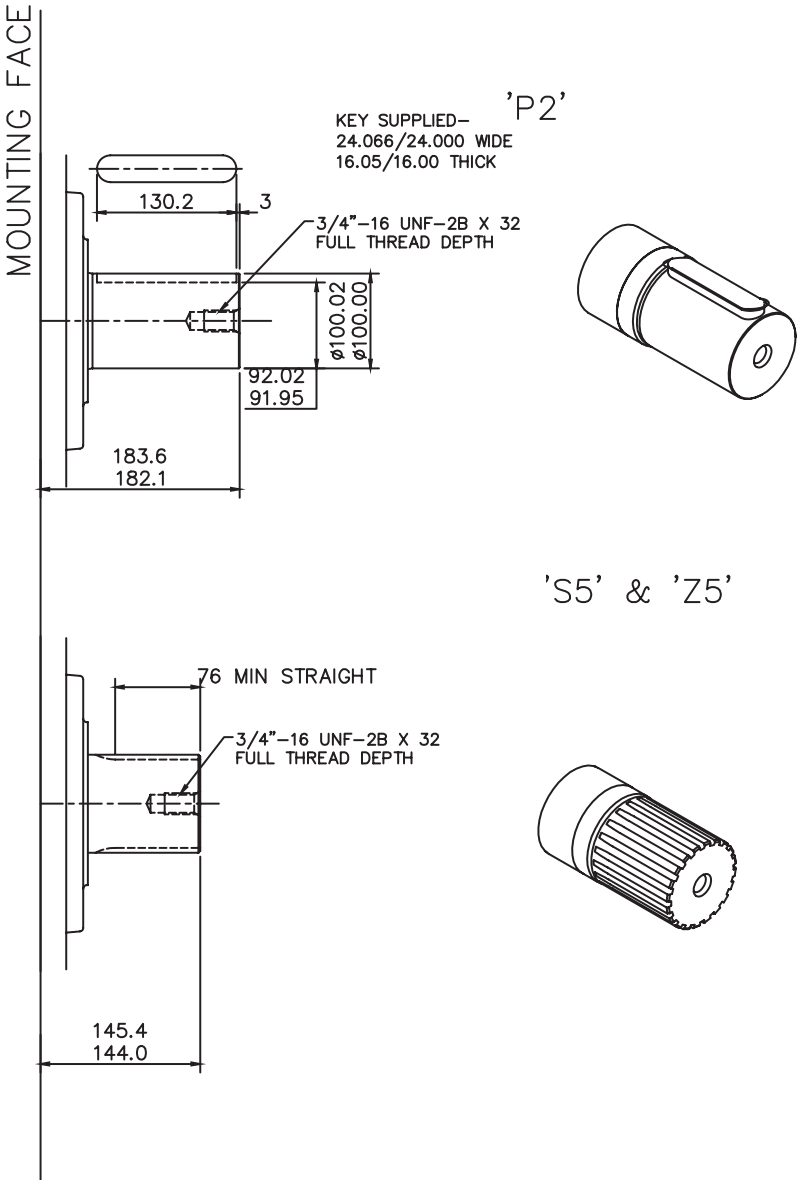


### SPLINE DATA

| 'S5' | |
|---|---|
| PRESSURE ANGLE | 30° |
| NUMBER OF TEETH | 23 |
| PITCH | 6/12 |
| MAJOR DIAMETER | 100.652/100.526 |
| FORM DIAMETER | 92.939 |
| MINOR DIAMETER | 92.184/91.626 |
| PIN DIAMETER | 8.128 |
| DIAMETER OVER PINS | 109.573/109.517 |

| 'Z5' |
|---|
| DIN 5480 W100 x 4 x 24 x 7h |

# 3-4 HPB150/200 (cont)

## HPB150/200 - 'Q' Shafts

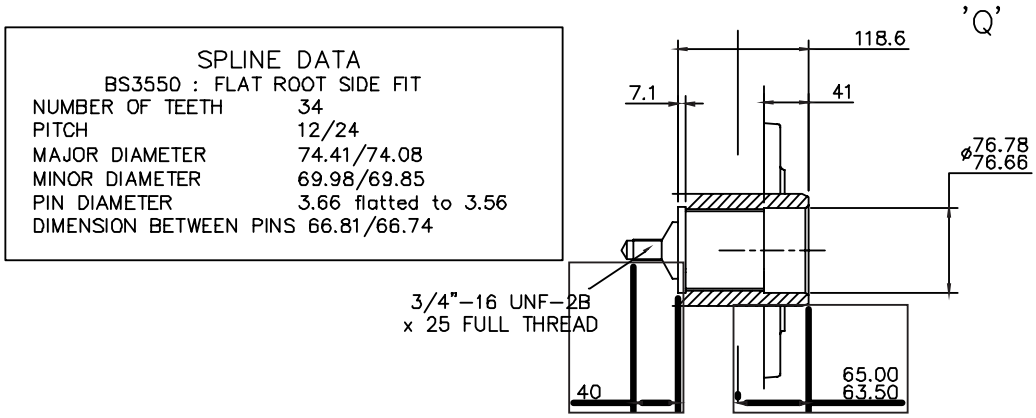


## 'SM3' Valve Housing

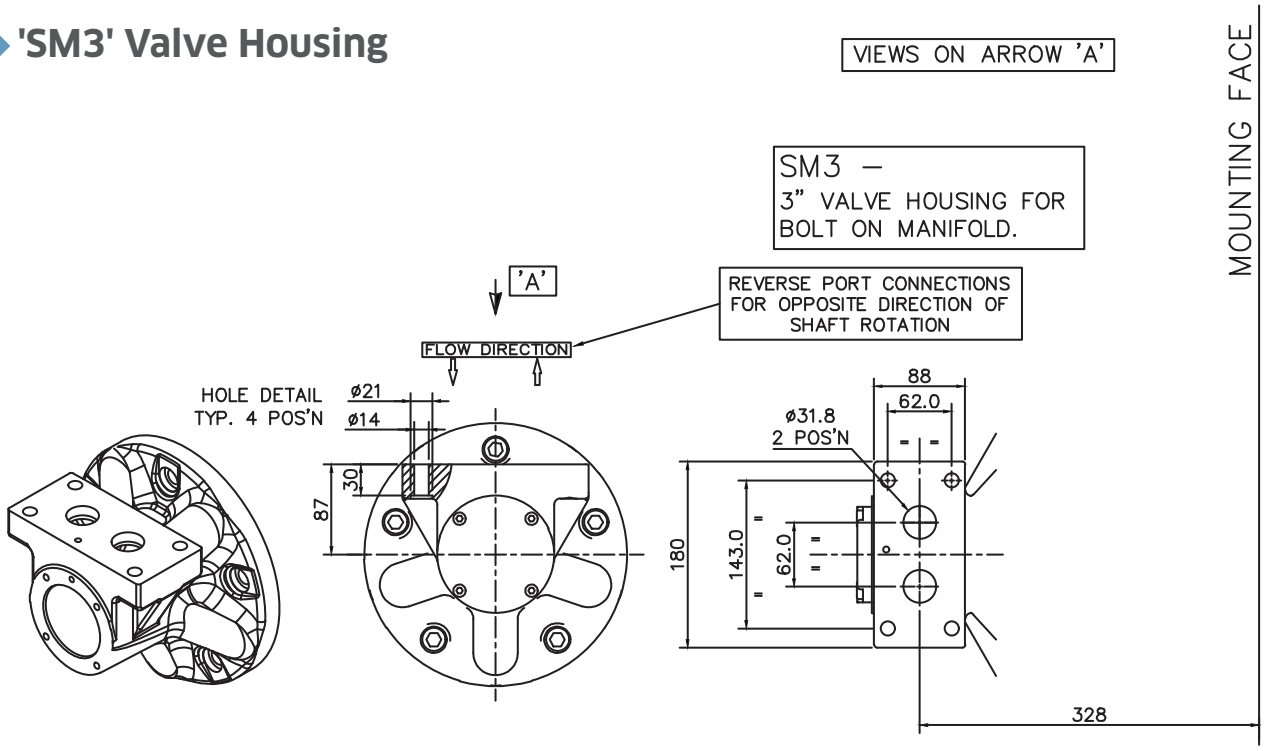

# 3-4 HPB150/200 (cont)

## 'F3' & 'FM3' Valve Housings

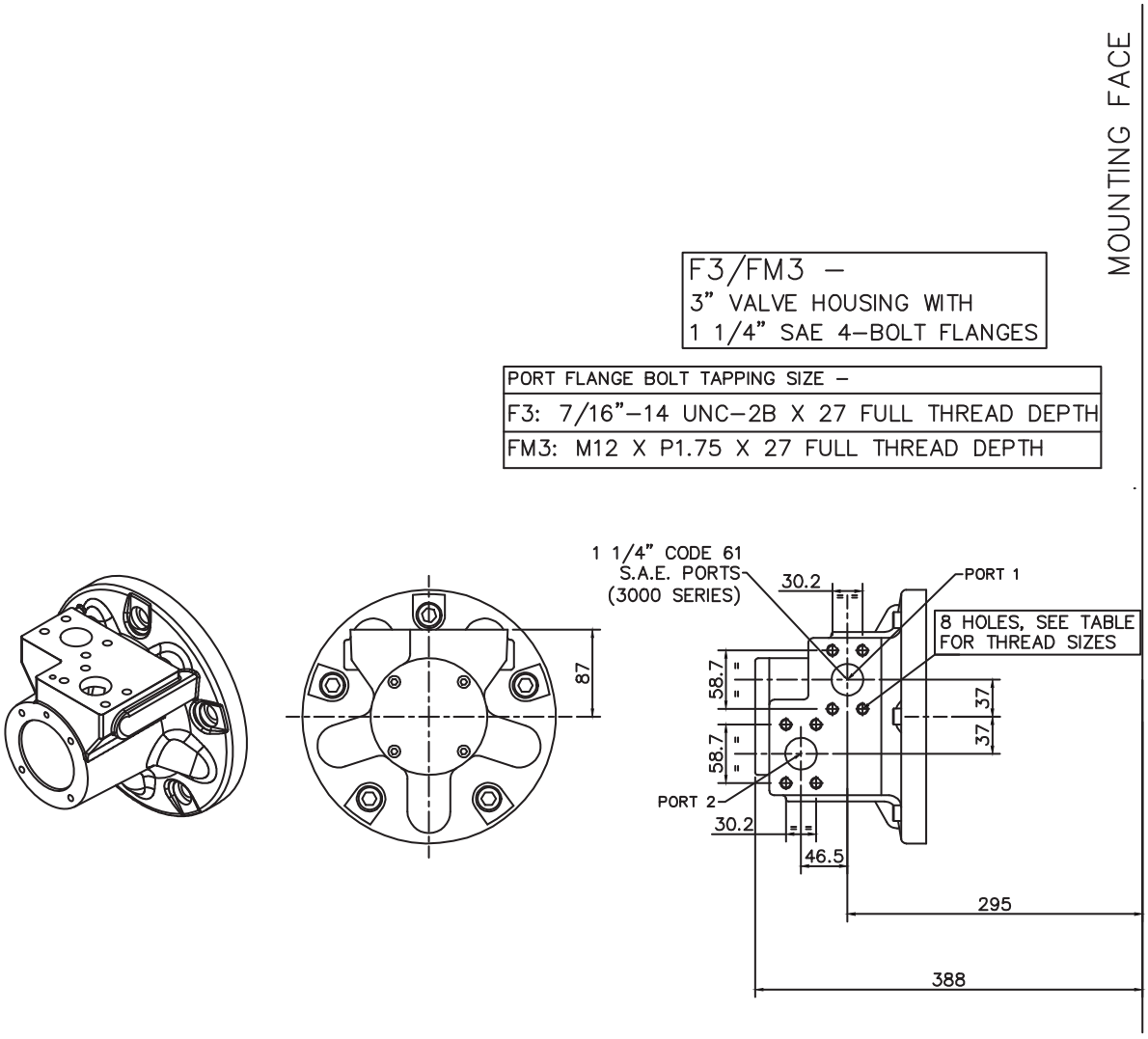

# 3-4 HPB150/200 (cont)

## 'F4' & 'FM4' Valve Housings

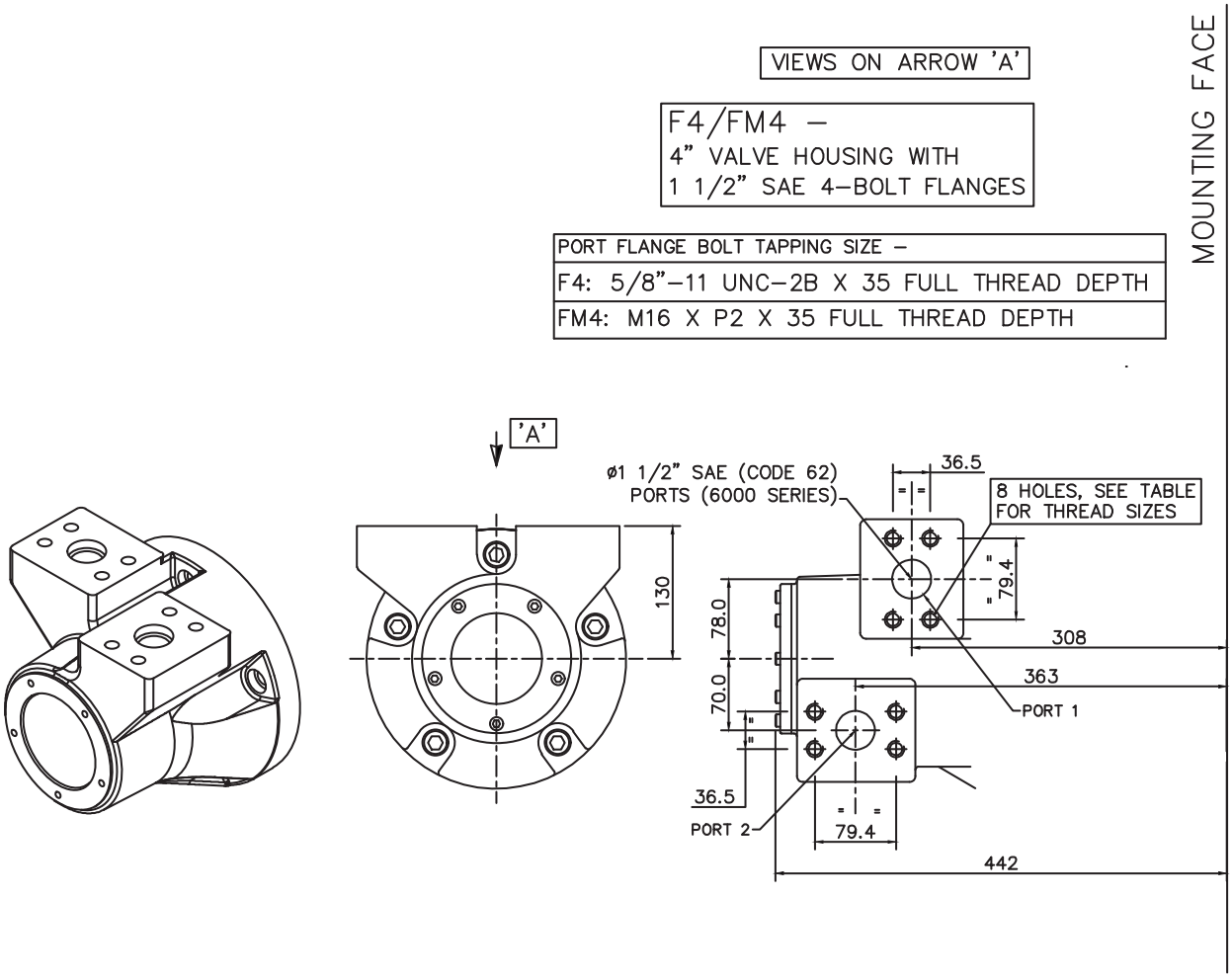

# 3-4 HPB150/200 (cont)

## Installation

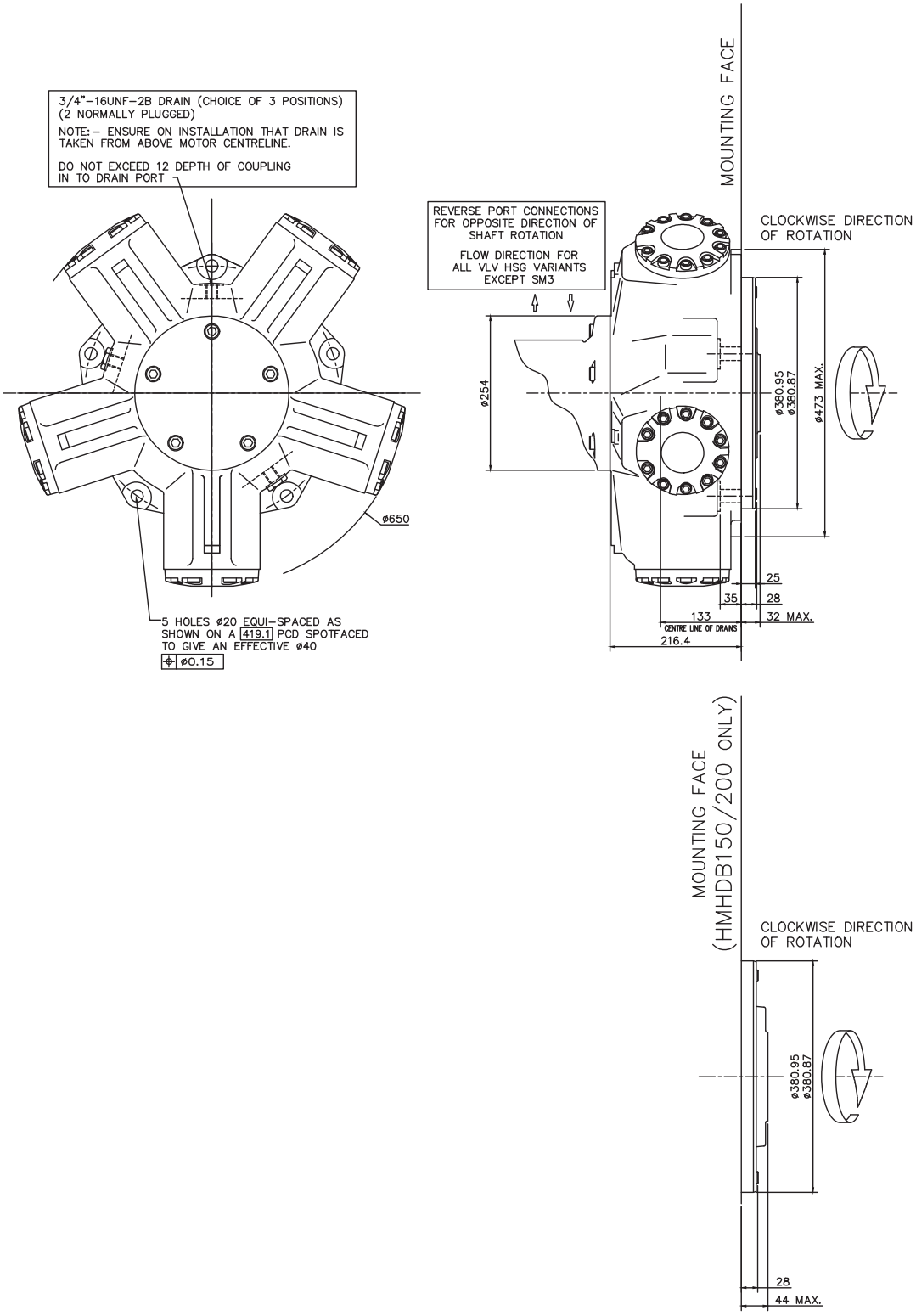

# 3-5 HPB270

## HPB270 - 'P1', 'S3' & 'Z' Shafts

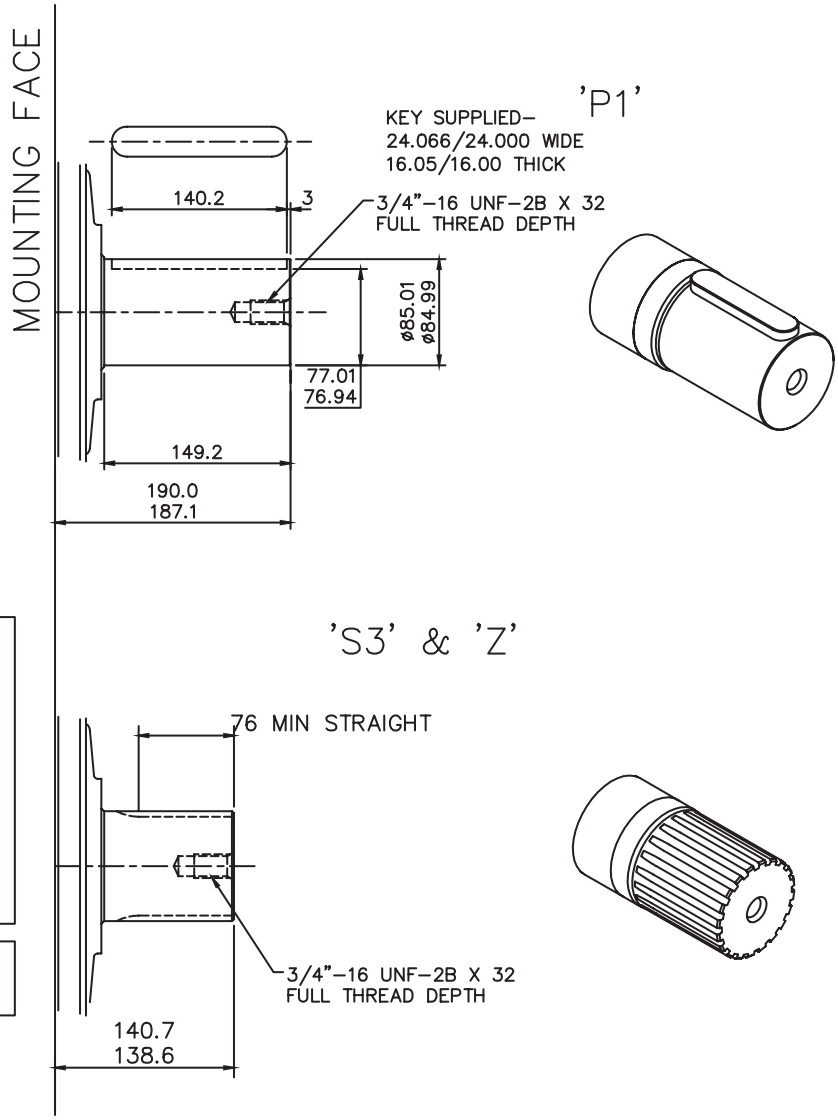


SPLINE DATA

| 'S3' | |
|---|---|
| TO BS 3550 (ANSI B92.1, CLASS 5) | |
| FLAT ROOT SIDE FIT, CLASS 1 | |
| PRESSURE ANGLE | 30° |
| NUMBER OF TEETH | 20 |
| PITCH | 6/12 |
| MAJOR DIAMETER | 87.953/87.825 |
| FORM DIAMETER | 80.264 |
| MINOR DIAMETER | 79.485/78.925 |
| PIN DIAMETER | 8.128 |
| DIAMETER OVER PINS | 97.084/97.030 |

| 'Z' |
|---|
| DIN 5480 W100 x 4 x 24 x 7h |

# 3-5 HPB270 (cont)

## HPB270 - 'T' & 'Q' Shaft

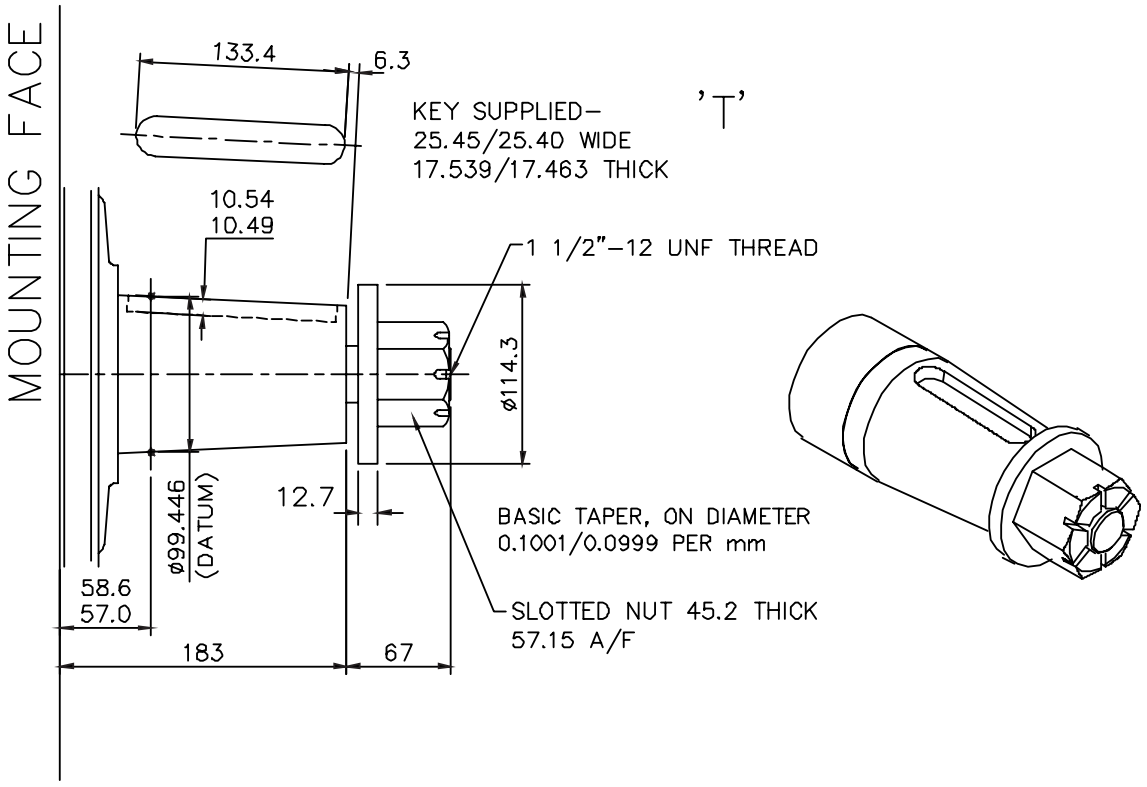


| SPLINE DATA | |
|---|---|
| BS3550 : FLAT ROOT SIDE FIT | |
| NUMBER OF TEETH | 34 |
| PITCH | 12/24 |
| MAJOR DIAMETER | 74.41/74.08 |
| MINOR DIAMETER | 69.98/69.85 |
| PIN DIAMETER | 3.66 flatted to 3.56 |
| DIMENSION BETWEEN PINS | 66.81/66.74 |

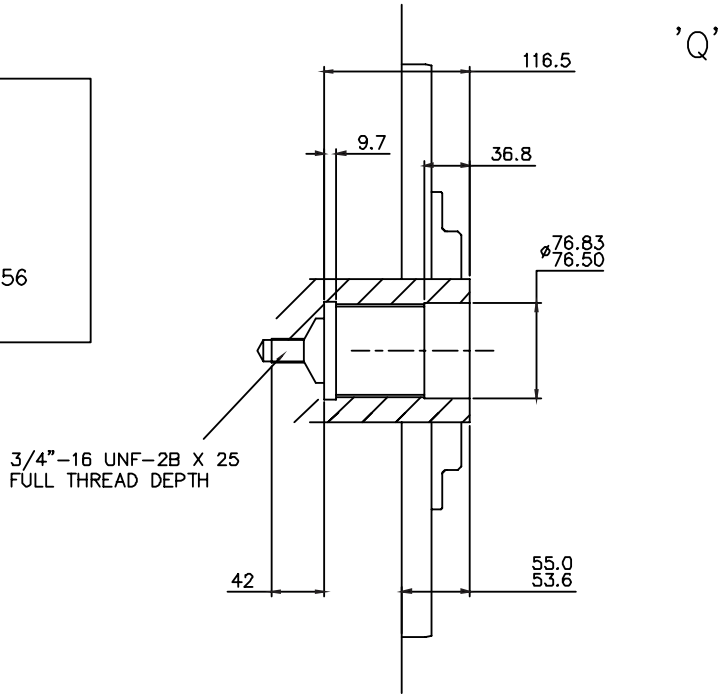

# 3-5 HPB270 (cont)

## HPB270 - 'P2' & 'S5' Shafts

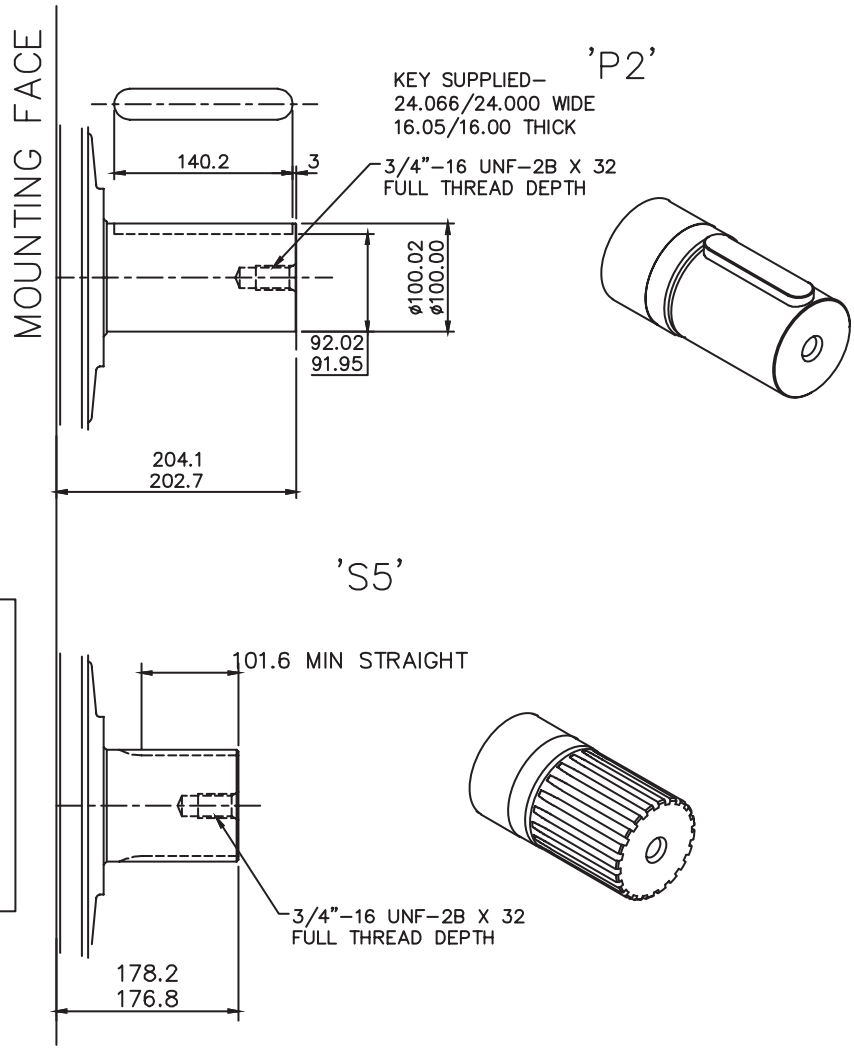


SPLINE DATA

| 'S3' | |
|---|---|
| TO BS 3550 (ANSI B92.1, CLASS 5) | |
| FLAT ROOT SIDE FIT, CLASS 1 | |
| PRESSURE ANGLE | 30° |
| NUMBER OF TEETH | 23 |
| PITCH | 6/12 |
| MAJOR DIAMETER | 100.653/100.526 |
| FORM DIAMETER | 92.939 |
| MINOR DIAMETER | 92.184/91.625 |
| PIN DIAMETER | 8.128 |
| DIAMETER OVER PINS | 109.573/109.517 |

# 3-5 HPB270 (cont)

## HPHDB270 - 'Z' Shaft

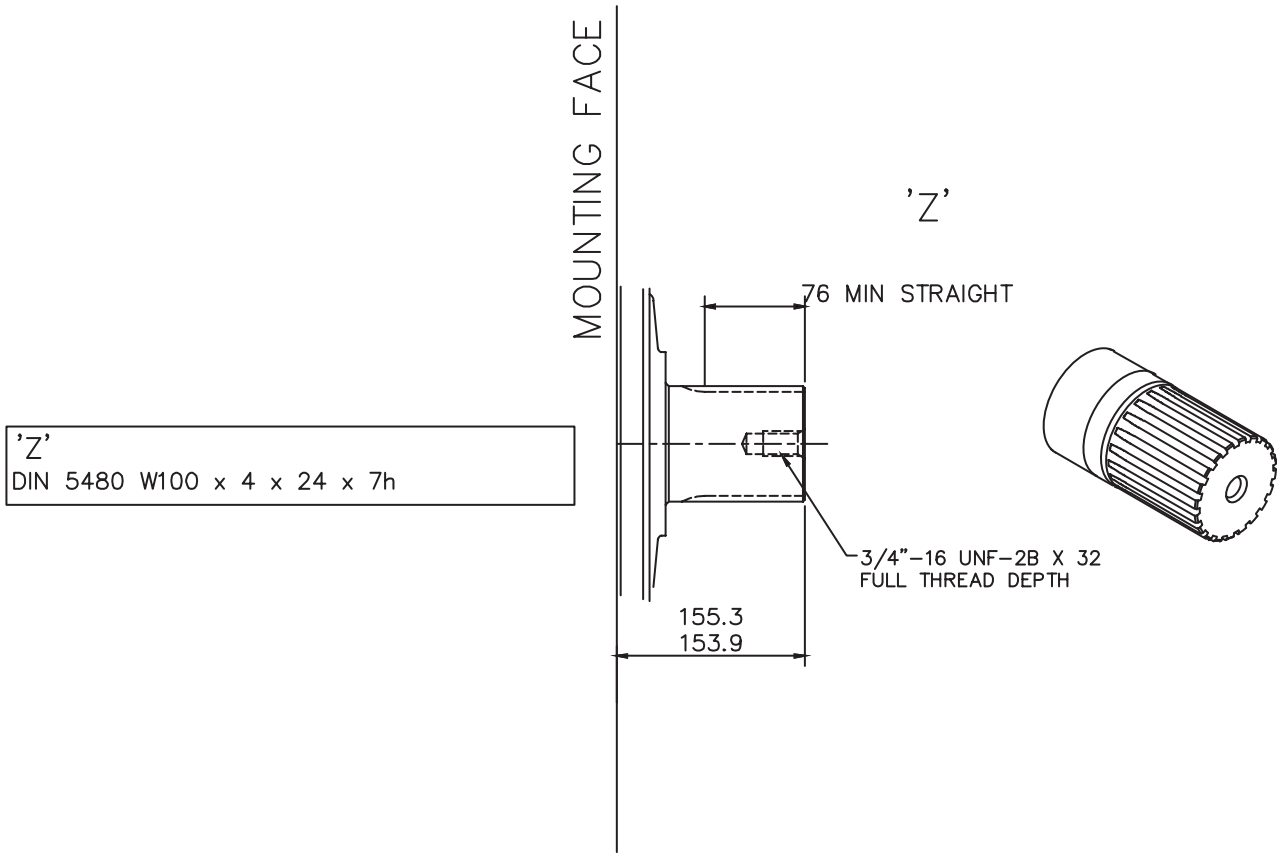

# 3-5 HPB270 (cont)

## 'F4' & 'FM4' Valve Housings

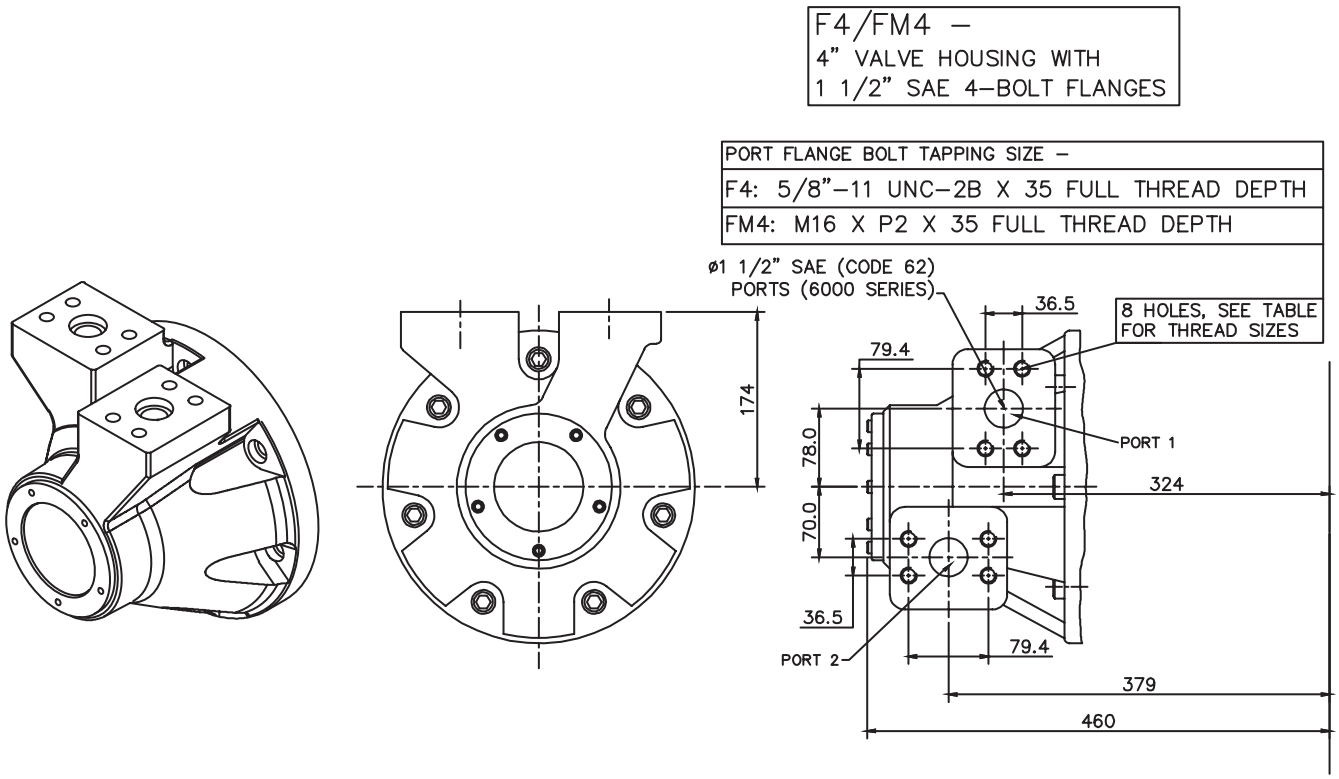

# 3-5 HPB270 (cont)

## Installation

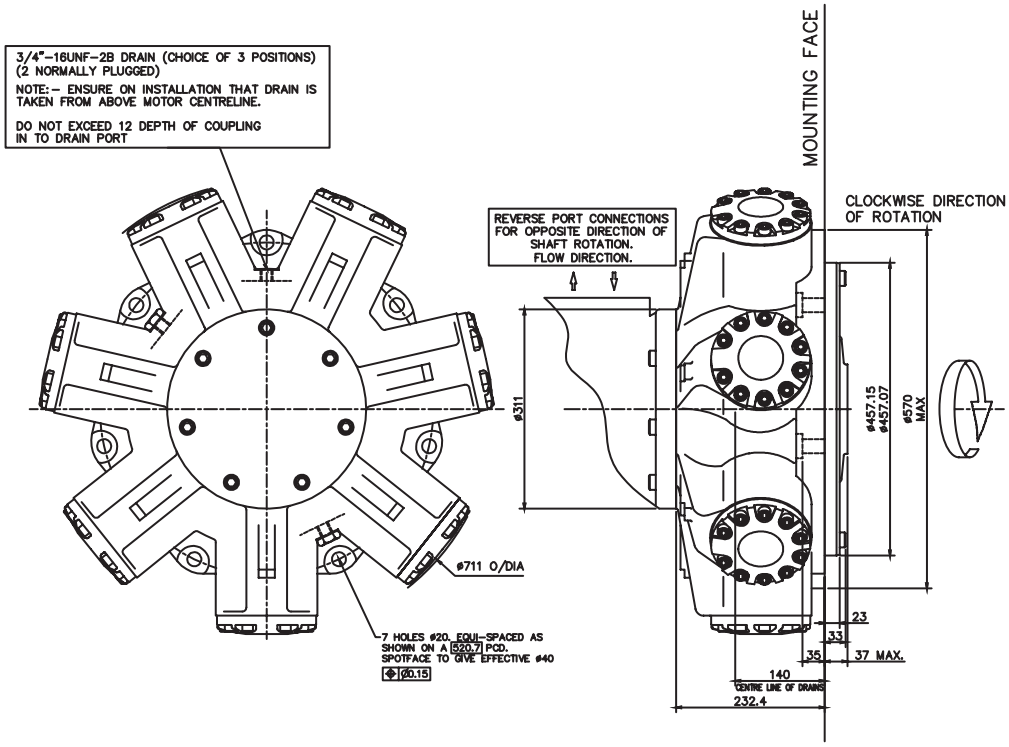


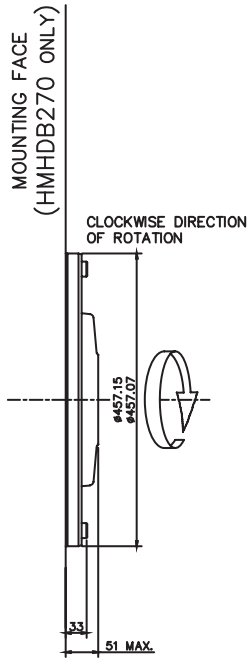

# 3-6 HPB325

## HPB325 - 'P1', 'S3' & 'Z' Shafts

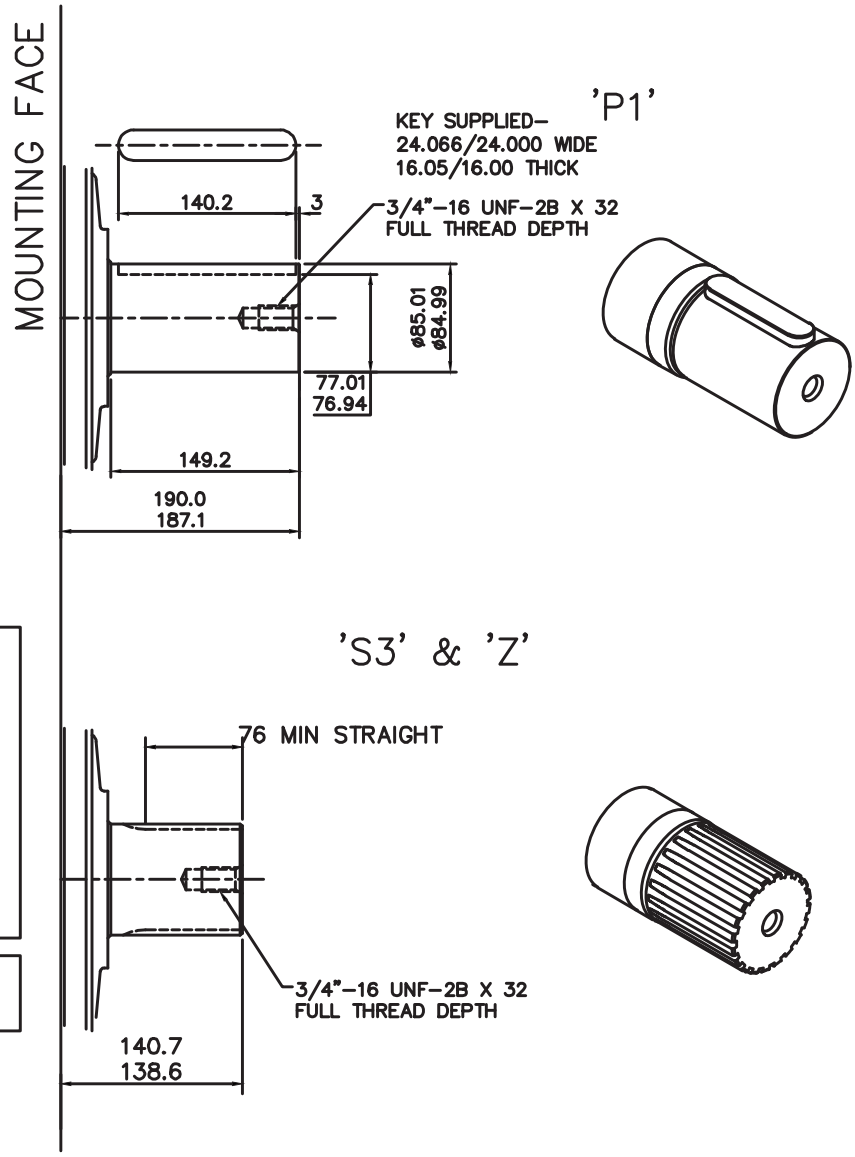


SPLINE DATA

| 'S3' | |
|---|---|
| TO BS 3550 (ANSI B92.1, CLASS 5) | |
| FLAT ROOT SIDE FIT, CLASS 1 | |
| PRESSURE ANGLE | 30° |
| NUMBER OF TEETH | 20 |
| PITCH | 6/12 |
| MAJOR DIAMETER | 87.953/87.825 |
| FORM DIAMETER | 80.264 |
| MINOR DIAMETER | 79.485/78.925 |
| PIN DIAMETER | 8.128 |
| DIAMETER OVER PINS | 97.084/97.030 |

| 'Z' |
|---|
| DIN 5480 W100 x 4 x 24 x 7h |

# 3-6 HPB325 (cont)

## HPB325 - 'T' & 'Q' Shaft

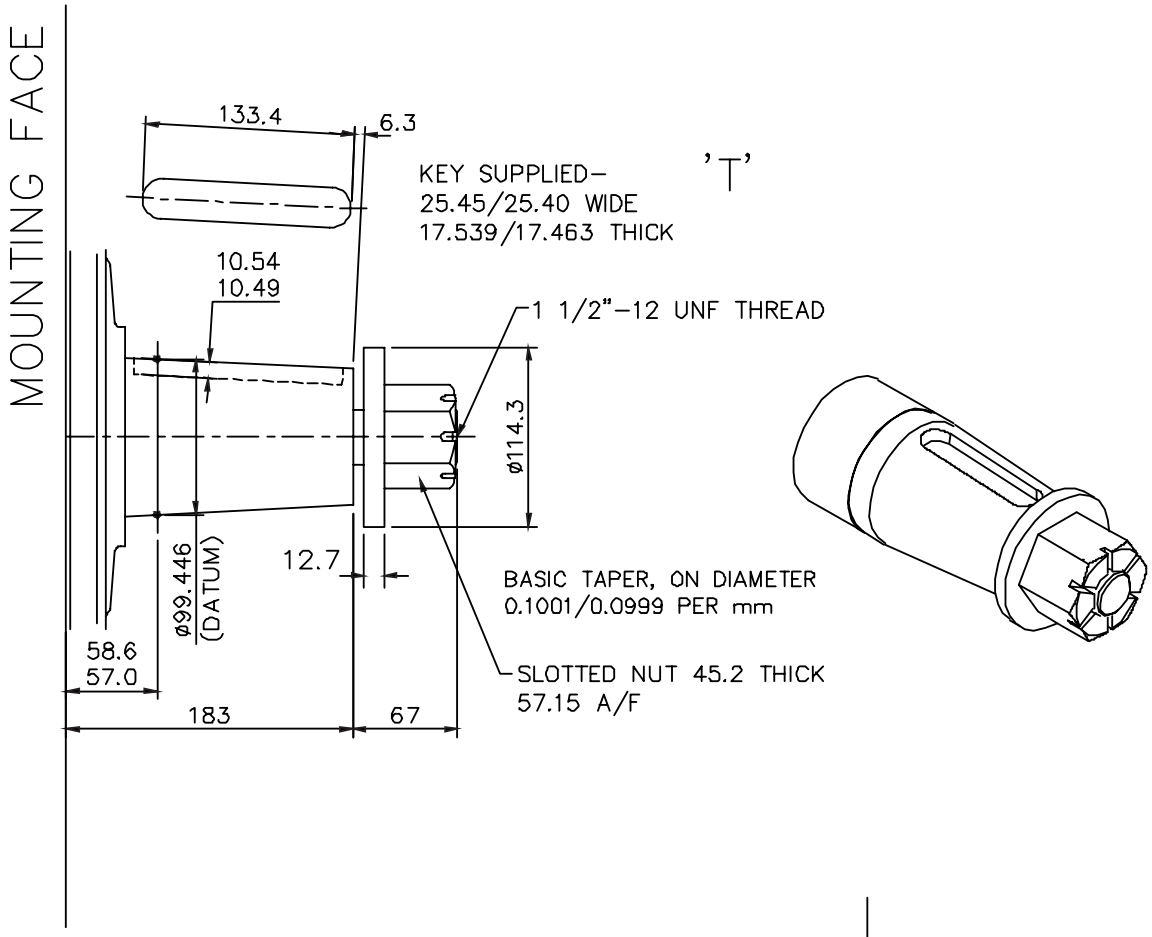


| SPLINE DATA | |
|---|---|
| BS3550 : FLAT ROOT SIDE FIT | |
| NUMBER OF TEETH | 34 |
| PITCH | 12/24 |
| MAJOR DIAMETER | 74.41/74.08 |
| MINOR DIAMETER | 69.98/69.85 |
| PIN DIAMETER | 3.66 flatted to 3.56 |
| DIMENSION BETWEEN PINS | 66.81/66.74 |

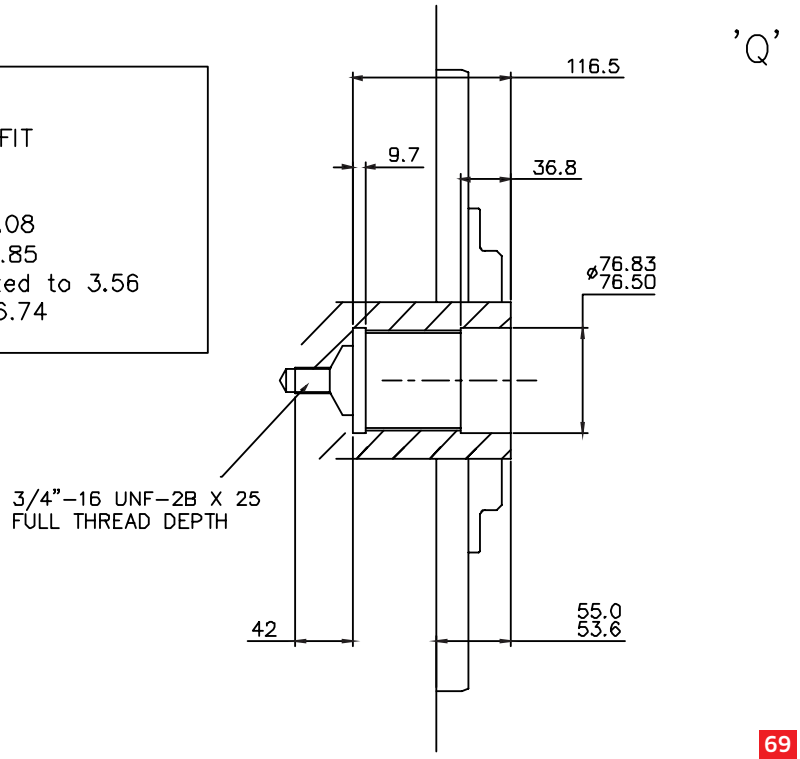

# 3-6 HPB325 (cont)

## HPB325 - 'P2' & 'S5' Shafts

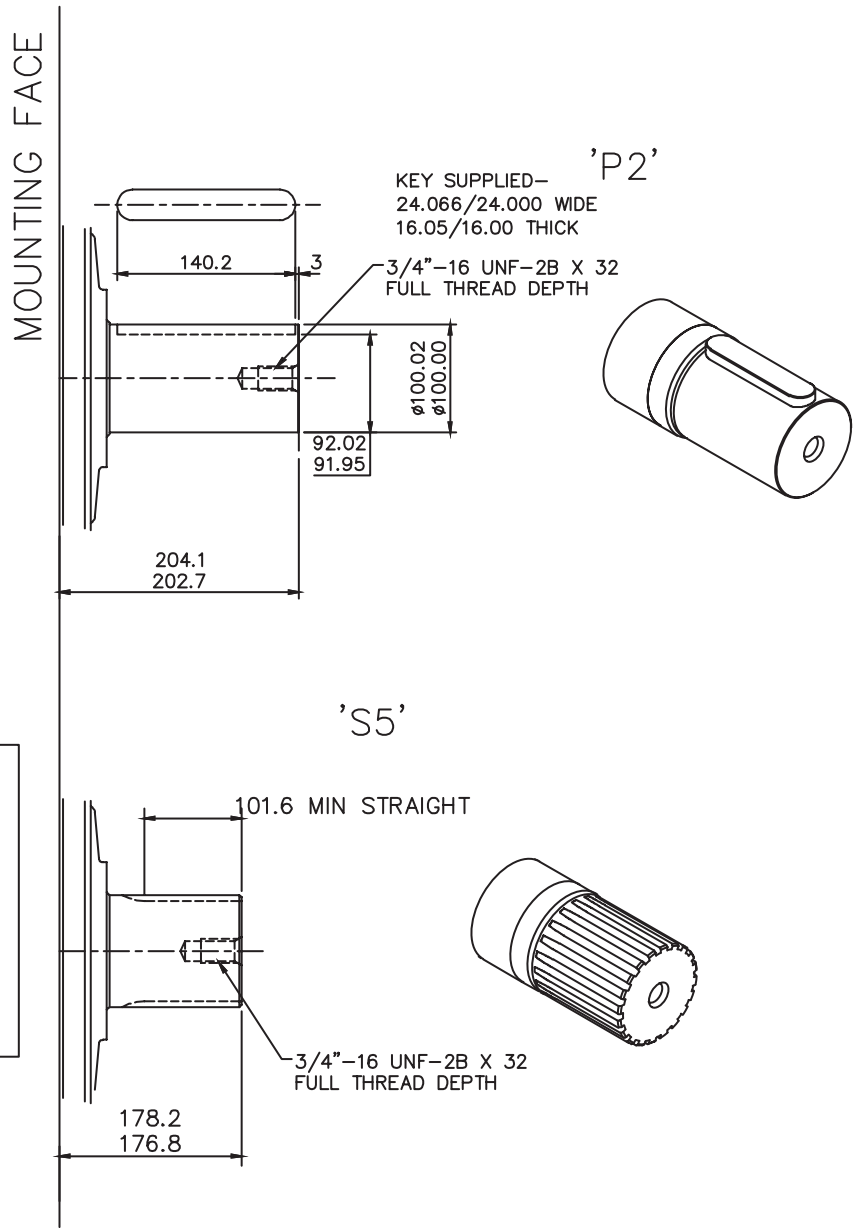


SPLINE DATA

| 'S3' | |
|---|---|
| TO BS 3550 (ANSI B92.1, CLASS 5) | |
| FLAT ROOT SIDE FIT, CLASS 1 | |
| PRESSURE ANGLE | 30° |
| NUMBER OF TEETH | 23 |
| PITCH | 6/12 |
| MAJOR DIAMETER | 100.653/100.526 |
| FORM DIAMETER | 92.939 |
| MINOR DIAMETER | 92.184/91.625 |
| PIN DIAMETER | 8.128 |
| DIAMETER OVER PINS | 109.573/109.517 |

# 3-6 HPB325 (cont)

## HPHDB325 - 'Z' Shaft

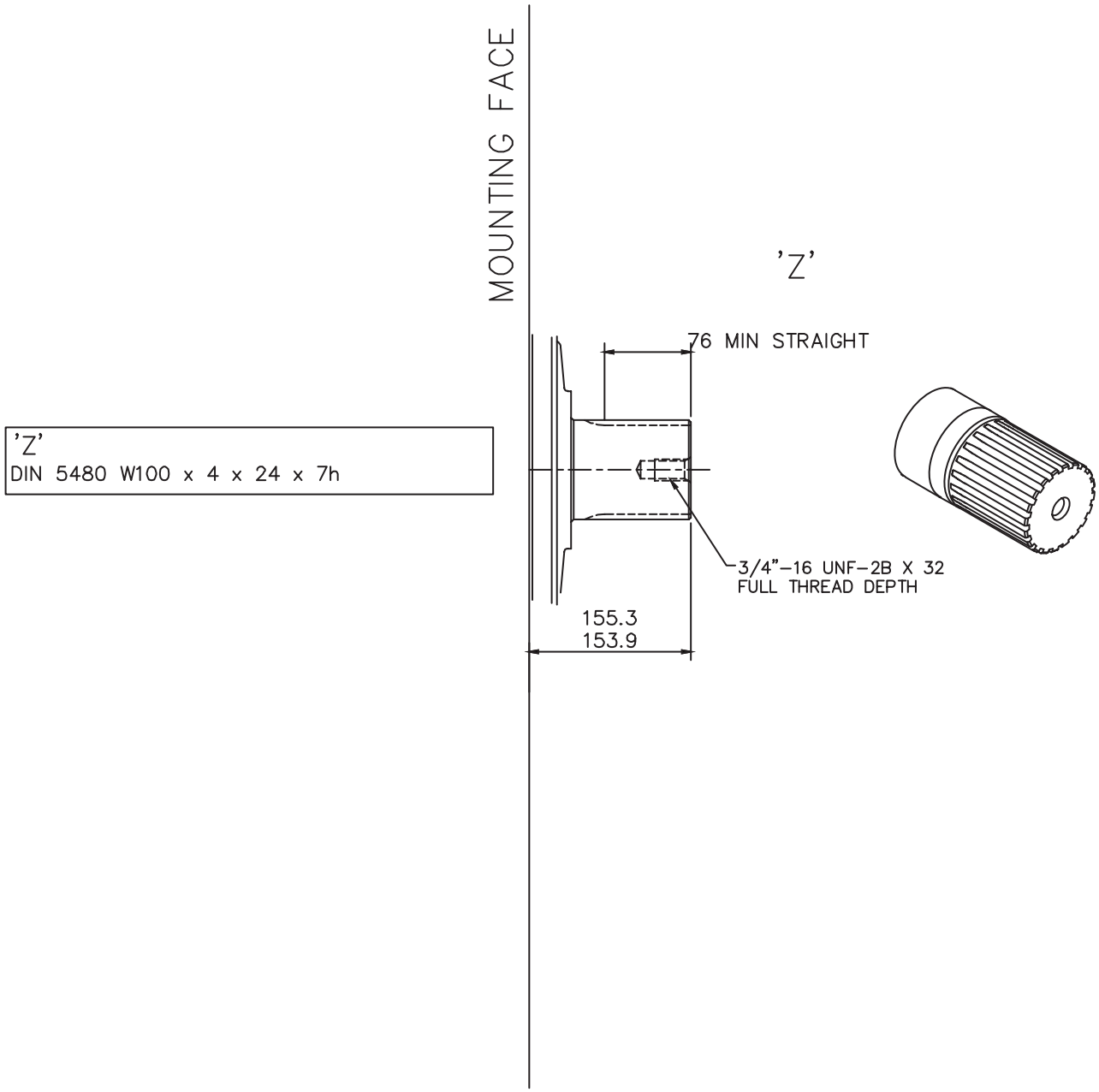

# 3-6 HPB325 (cont)

## 'F4' & 'FM4' Valve Housings

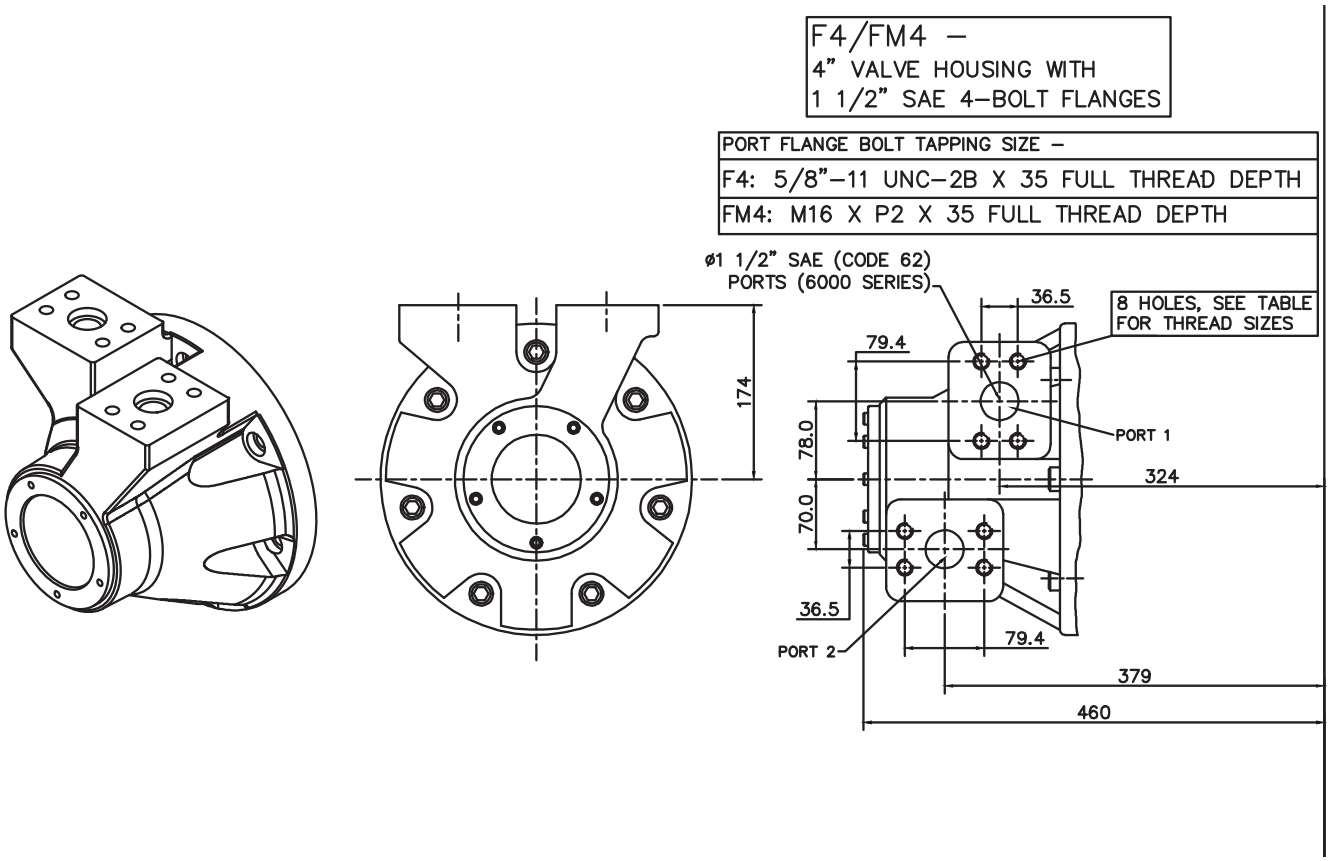

# 3-6 HPB325 (cont)

## Installation

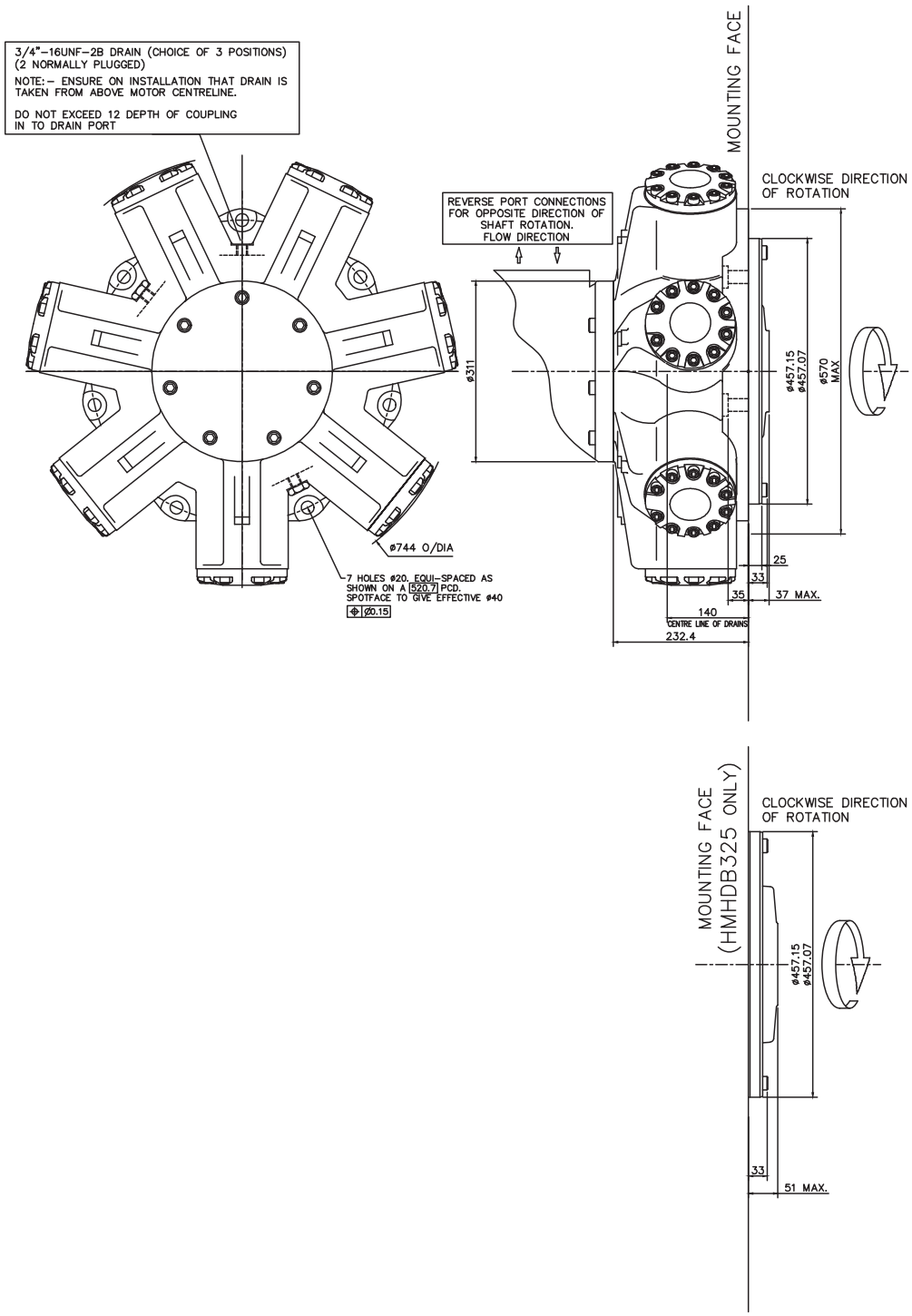

# NOTES

## Conversion Table

| Pressure | |
|---|---|
| bar | PSI |
| 1 | 14.5 |
| **Flow** | |
| l/min | gal/min |
| 1 | 0.264 US |
| 1 | 0.219 UK |
| **Length** | |
| mm | inch |
| 25.4 | 1 |
| **Torque** | |
| Nm | lbf ft |
| 1 | 1.737 |
| **Power** | |
| kW | hp |
| 1 | 1.341 |
| **Mass** | |
| kg | lb |
| 1 | 2.2 |

# NOTES

# NOTES

**KAWASAKI PRECISION MACHINERY (UK) LTD**
Ernesettle, Plymouth
Devon, PL5 2SA, England

Tel: +44 1752 364394
Fax: +44 1752 364816
Mail: info@kpm-uk.co.uk
Website: www.kawasakihydraulics.com

OTHER GLOBAL SALES OFFICES

**JAPAN**
Kawasaki Heavy Industry Ltd, Precision Machinery Ltd. Tokyo Office World Trade Center Bidg.
4-1 Hamamatsu-cho
2-chome, Minato-ku
Tokyo 105-6116
Japan
Tel: +81-3-3435-6862
Website: www.khi.co.jp/kpm

**U.S.A**
Kawasaki Precision Machinery (U.S.A.), Inc.
3838 Broadmoor Avenue S.E.
Grand Rapids
Michigan 49512
U.S.A.
Tel: +1-616-975-3101
Website: www.kpm-usa.com

**CHINA**
Kawasaki Precision Machinery Trading (Shanghai) Co., Ltd. 17th Floor (Room 1701), The Headquarters Building No168 XiZang Road (M)
Huangpu District
Shanghai 200001
China
Tel: +86-021-3366-3800

**KOREA**
Flutek, Ltd.
192-11, Shinchon-dong
Changwon
Kyungnam 641-370
Korea
Tel: +82-55-286-5551
Website: www.flutek.co.kr

**The specified data is for product description purposes only and may not be deemed to be guaranteed unless expressly confirmed in the contract.**

Data sheet: M-10.18