Kawasaki
Powering your potential

Precision Machinery Company

Fixed Displacement Radial Piston
Staffa Motor
HMB Series

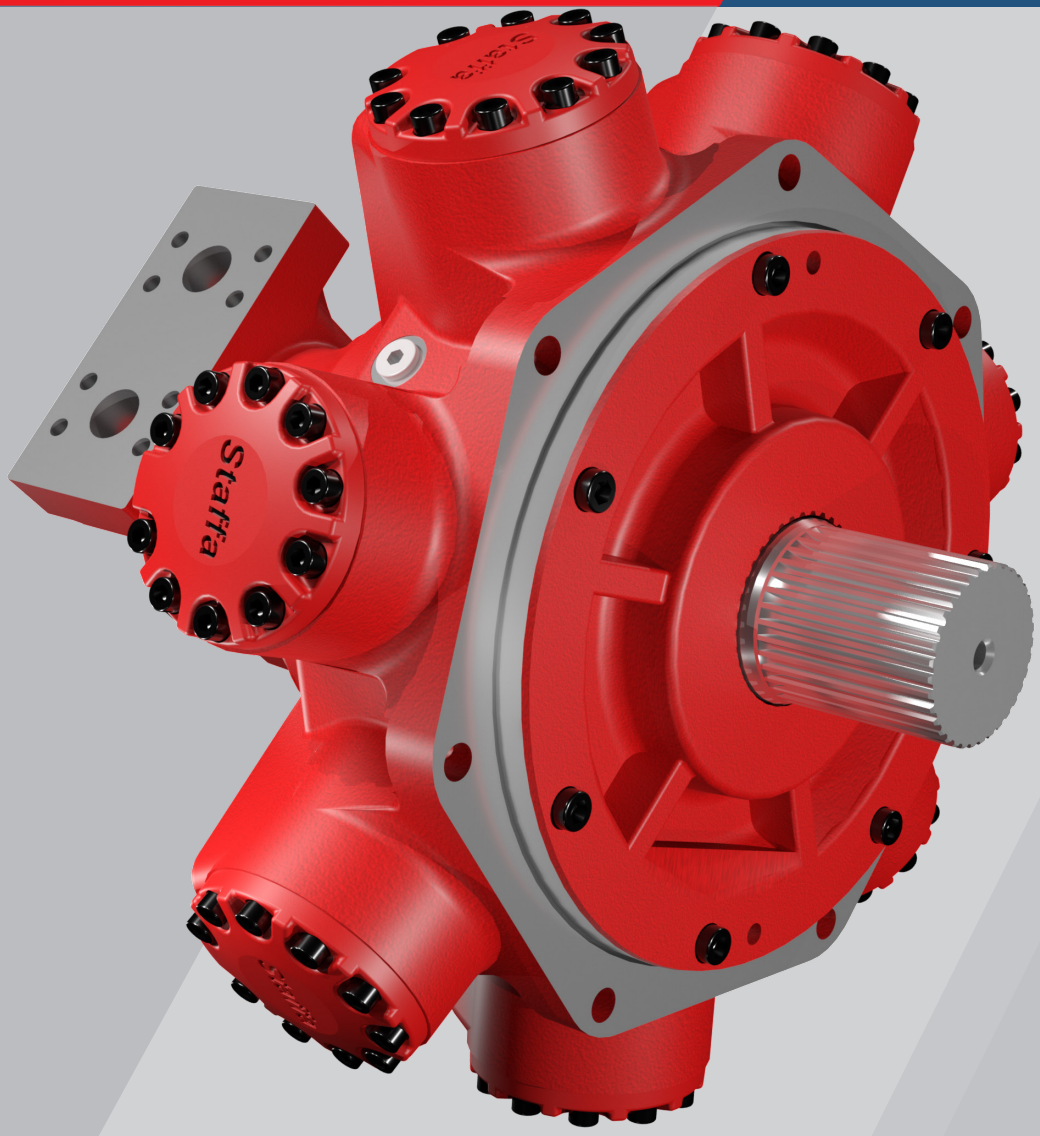

CONTENTS

Ordering Code 4

1-1 Model Coding 4

Technical Information 6

2-1 Performance Data 6
2-2 Volumetric Efficiency Data 12
2-3 Shaft Power Calculation 13
2-4 Functional Symbols 14
2-5 Stress Limits 15
2-6 Bearing Life Notes 16
2-7 Circuit and Application Notes 17
2-8 Motor Operation at Low Temperature 20
2-9 Freewheeling Notes 21
2-10 Crankcase Drain Connections 22
2-11 Installation Data 23
2-12 Special Features 24

Dimensions 38

3-1 HMB030 38
3-1 HMB030 (cont) 39
3-1 HMB030 (cont) 40
3-2 HMB045 42
3-2 HMB045 (cont) 44
3-3 HMB060/080 45
3-4 HMB100 48
3-5 HM(HD)B125 51
3-7 HM(HD)B270 61
3-8 HM(HD)B325 66
3-9 HMHDB400 71
3-10 HMB500 73
3-11 Preferred Hydraulic Connections 75

Date	Revision	Changes
01/01/2019	MYK5849-HMB-data-sheet-A4-REV-21	Original
12/12/2024	M200112.24-HMB	• Removal of FM3 FM4 and F3 F4 Valve housing • Replaced with SM and SFM valve housing

HMB Series

Fixed Displacement Radial Piston Hydraulic Motor

General Descriptions

The Kawasaki Staffa range of high torque low speed fixed displacement radial piston hydraulic motors consists of 13 frame sizes ranging from the HMB030 to HMB500. Capacity ranges from 188 to 8,000 cc/rev.

The rugged, well proven design incorporates high efficiency combined with good breakout torque and smooth running capability. Various features and options are available including, on request, mountings to match competitors' interfaces.

The Kawasaki Staffa range also includes dual and triple displacement motors. To obtain details of these product ranges please refer to datasheet M-2002/03.17 and M-2005/12.17

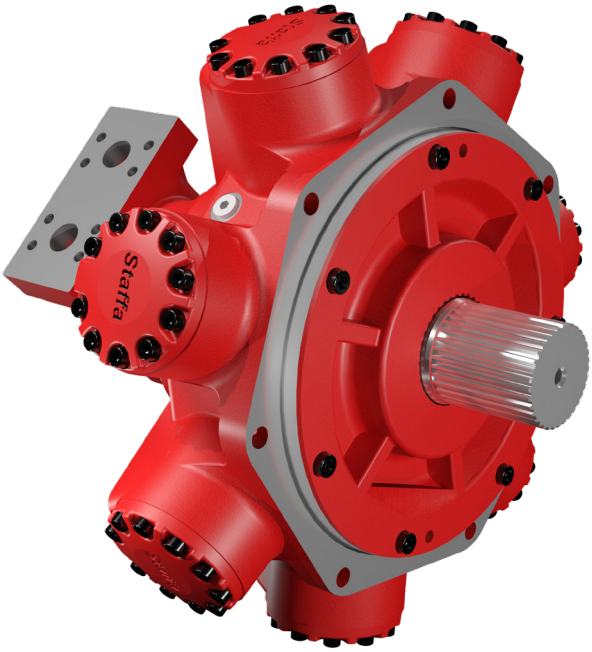

Features

- **Rugged, reliable, proven design**
- **Unique hydrostatic balancing provides minimum wear and extended life**
- **High volumetric and mechanical efficiency**
- **Capacities range from 188 to 8,000cc/rev**
- **Large variety of shaft and porting options**
- **Output torque up to 25,250Nm**
- **Wide range of mounting interfaces available**
- **Alternative displacements also available**

1 Ordering Code

1-1 Model Coding

F11/HM*B 060 / S3 V/ *** /Ts/ */ P*****

Fluid Type

Blank	Mineral oil
F3	Phosphate ester (HFD fluid)
F11	Water based fluids (HFA, HFB & HFC)
Alternative fluids contact Kawasaki	

Model Type

HMB	Standard
HMHDB	Heavy duty

** For B400 frame size, only Heavy Duty (HMHDB) is available.*

Motor Frame Size

See options Section 2-1

Shaft Type

See shaft type options in installation drawings

Shaft Orientation

Blank	Horizontal and vertically down
V	Vertically Up

Main Port Connections

See Port Connection options in section 3.11

Special Features

P*****	Special features (see Section 2-1)
PL***	Non-catalogued features, (*****) = number assigned by Kawasaki as required

Design Series Number

Current series for HMB motors

Tacho Encoder Drive

Blank	None
Tj*	Square wave output with directional signal*
Ts	The addition of the FU210 module provides a software configured single channel tachometer with a /4-20mA analogue current.

See Section 2-12
** Not available for frame size.*

1-1 Model Coding

Special Features Suffix

/ P * * * * *

Shaft Seal Enhancements

A	High pressure shaft seal
B	Improved shaft seal life
C	High pressure shaft seal & improved shaft seal life
0	None

See Section 2-12 for details

External Protection

B	Marine-specification primer paint
D	Unpainted
E	Marine Specification Cylinder Heads
F	Marine spec Cylinder Heads + Marine specification paint HP20
G	Marine spec Cylinder Heads + Carboline grey paint
0	None

See Section 2-12 for details

Installation Features

A	Drain port adaptor x 1
B	Drain port adaptor x 2
C	Φ21 mm mounting holes
D	Φ22 mm mounting holes
E	Φ21 mm mounting holes & Drain port adaptor x 1
F	Φ21 mm mounting holes & Drain port adaptor x 2
G	Φ22 mm mounting holes & Drain port adaptor x 1
H	Φ22 mm mounting holes & Drain port adaptor x 2
0	None

See Section 2-11 for details

Valve Enhancements

A	Improved cavitation resistance
B	Anti-clockwise
C	Thermal shock resistance
D	Improved caviation resistance & anti-clockwise
E	Improved cavitation resistance & thermal shock resistance
F	Anti-clockwise & thermal shock resistance
G	Improved cavitation resistance & anti-clockwise & thermal shock resistance
0	None

See Section 2-12 for details

Performance Enhancements

A	Increased starting torque
0	None

See Section 2-12 for details

2 Technical Information

2-1 Performance Data

Rating definitions

Continuous rating

For continuous duty the motor must be operating within each of the maximum values for speed, pressure and power.

Intermittent rating

Operation within the intermittent power rating (up to the maximum continuous speed) is permitted on a 15% duty basis, for periods up to 5 minutes maximum.

Intermittent max pressure

Intermittent max pressure: 300 bar.
This pressure is allowable on the following basis:

a) Up to 50rpm 15% duty for periods up to 5 minutes maximum.
b) Over 50rpm 2% duty for periods up to 30 seconds maximum.

Static pressure to DNV rules 405bar (DNV-GL-RU-Ship Part 4) - except HMB030 motors.

Limits for fire resistant fluids

Fluid Type	Continuous Pressure (bar)	Intermittent Pressure (bar)	Max Speed (rpm)	Model Type
HFA 5/95 oil-in-water emulsion	130	138	50% of limits of mineral oil	All models
HFB 60/40 water-in-oil emulsion	138	172	As for mineral oil	All models
HFC water glycol	103	138	50% of limits of mineral oil	All models
HFD Phosphate Ester	207	300	As for mineral oil	HMB030
	250	300	As for mineral oil	HMB045 to HMHDBB400 inc.
	190	227	As for mineral oil	HMB500

2-1 Performance Data

Specifications

Motor Type	Geometric displacement (cc/rev)	Average actual running torque (Nm/bar)	Max. continuous speed (rpm)	Max. continuous output power (kW)	Max. continuous pressure (bar)	Max. intermittent pressure (bar)
HMB030 (HMB010 replacement)	188	2.30	500	18	207	250
HMB030	442	6.56	450	42	207	250
HMB030 (FM3)	492	7.31	450	52	207	250
HMB045	740	10.95	400	60	250	300
HMB060	983	14.5	300	80	250	300
HMB080	1,344	19.9	300	100	250	300
HMB100	1,639	24.3	250	110	250	293
HMB125	2,050	30.66	220	100	250	300
HMHDB125						
HMB150	2,470	36.95	220	115	250	300
HMHDB150						
HMB150 (FM3)	2,470	36.95	168	115	250	300
HMB200	3,087	46.07	175	130	250	300
HMHDB200						
HMB200 (FM3)	3,087	46.07	135	130	250	300
HMB270	4,310	63.79	125	140	250	300
HMHDB270						
HMB325	5,310	79.4	100	140	250	300
HMHDB325						
HMHDB400	6,800	101	120	190	250	300
HMB500	8,000	114	100	170	190	227

Other non standard displacements are possible - check with Kawasaki for details.

2-1 Performance Data (cont)

Output Torque Curves

These torque curves indicate the maximum output torque and power of a fully run-in motor for a range of pressures and speeds when operating with zero outlet pressure on Mineral Oil of 50cSt (232 SUS) viscosity. High return line pressures will reduce torque for a given pressure differential. - x - x - x - Upper limit of continuous rating envelope.

HMB030

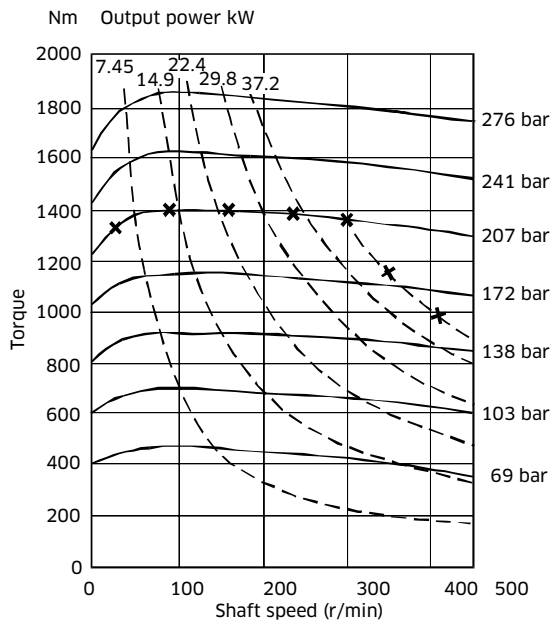

HMB030 2-piece

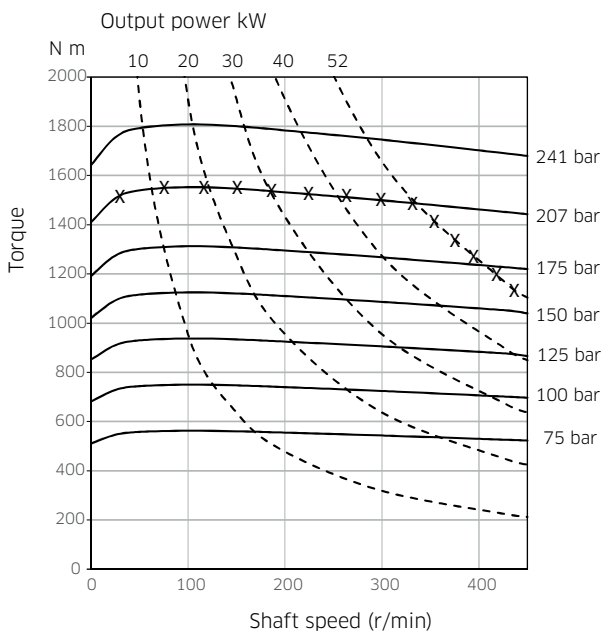

HMB045

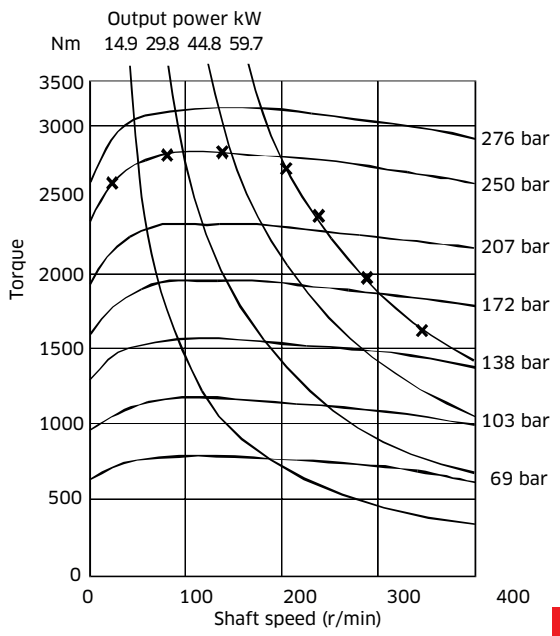

2-1 Performance Data (cont)

Output Torque Curves (cont)

HMB060

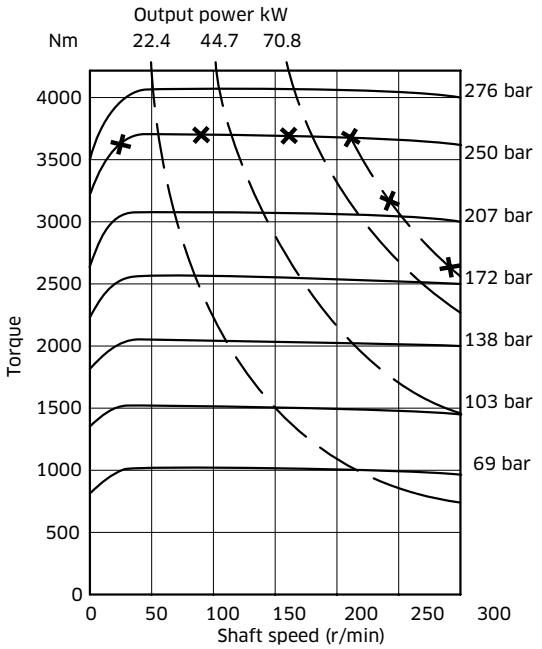

HMB080

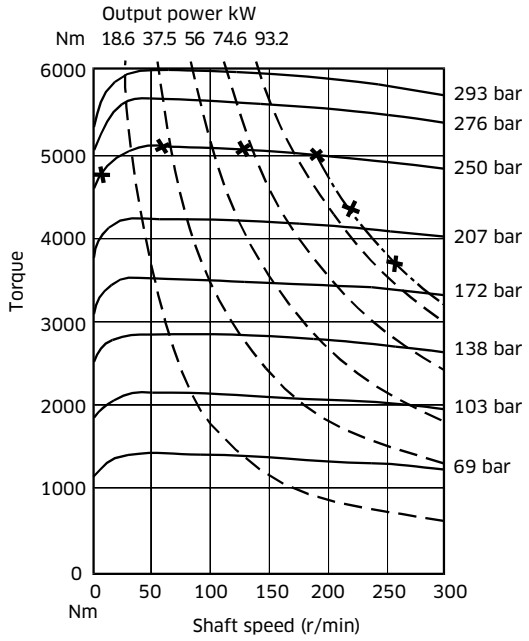

HMB100

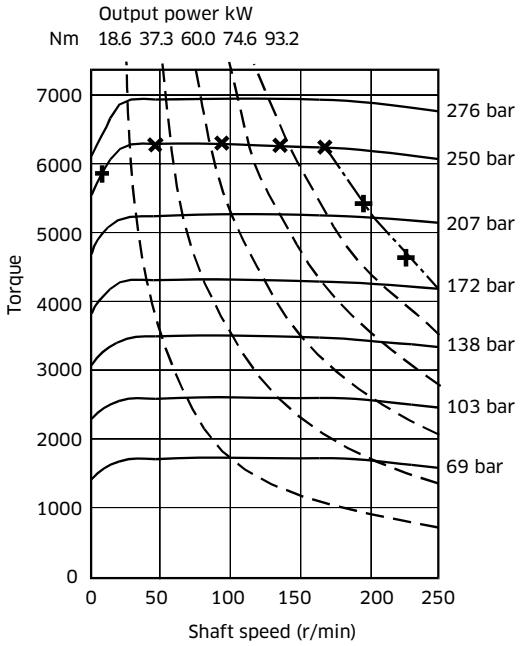

HM(HD)B125

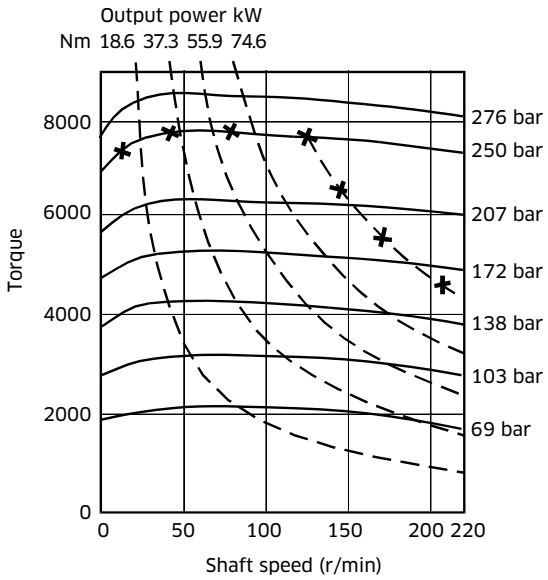

2-1 Performance Data (cont)

Output Torque Curves (cont)

HM(HD)B150

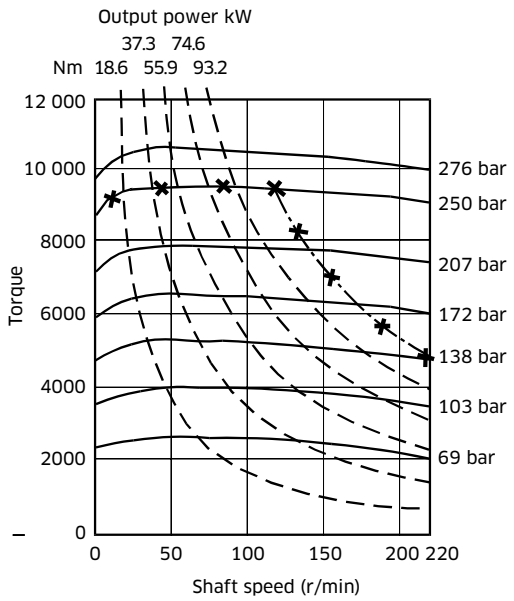

HM(HD)B200

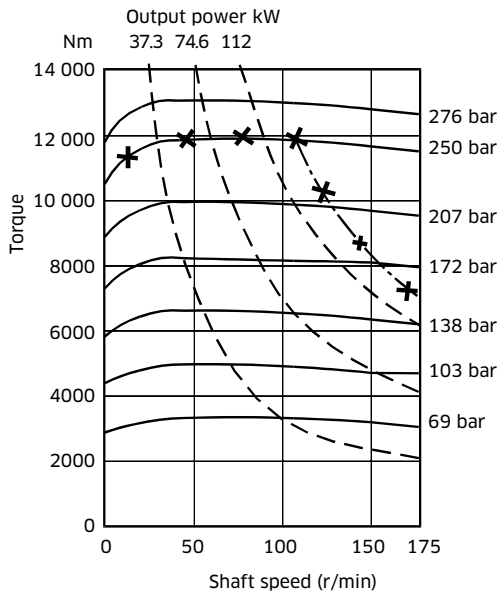

HM(HD)B270

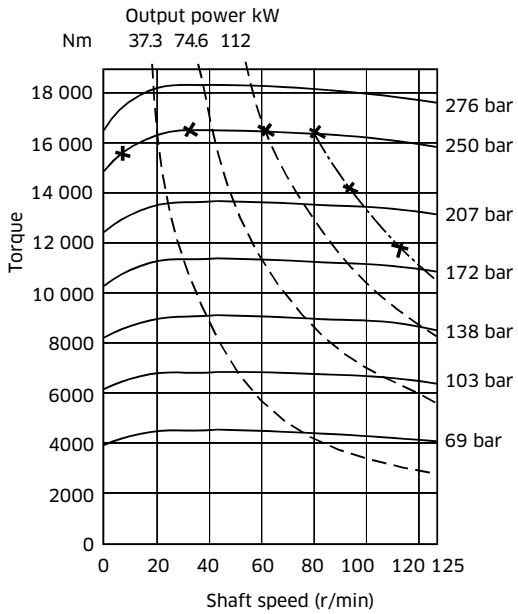

HM(HD)B325

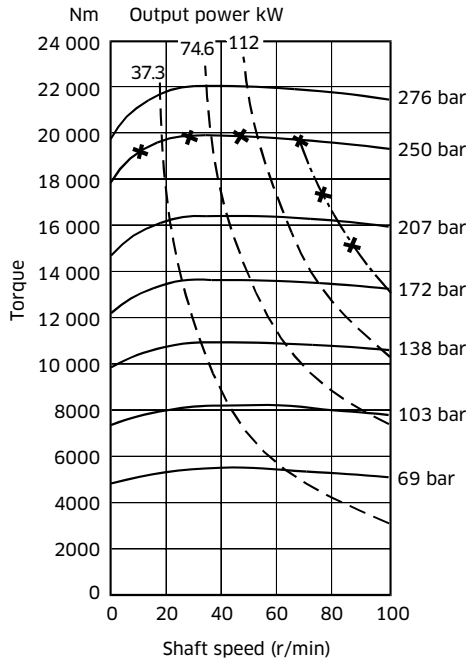

2-1 Performance Data (cont)

Output Torque Curves (cont)

HMHDB400

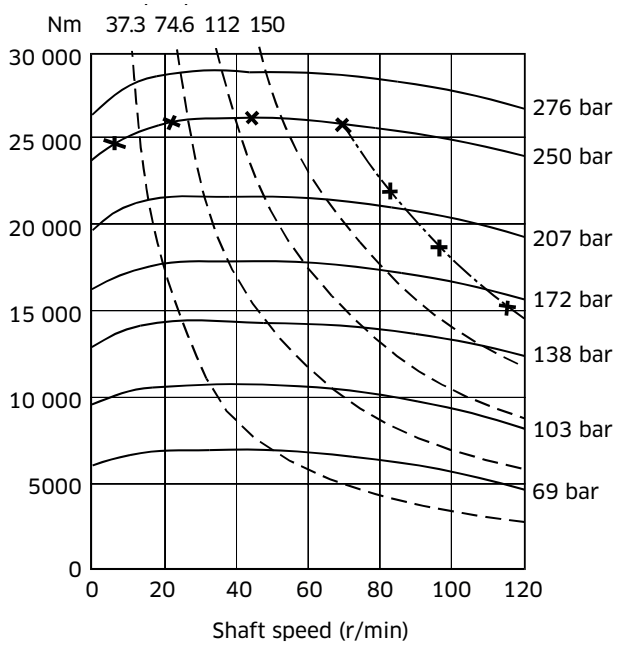

HMB500

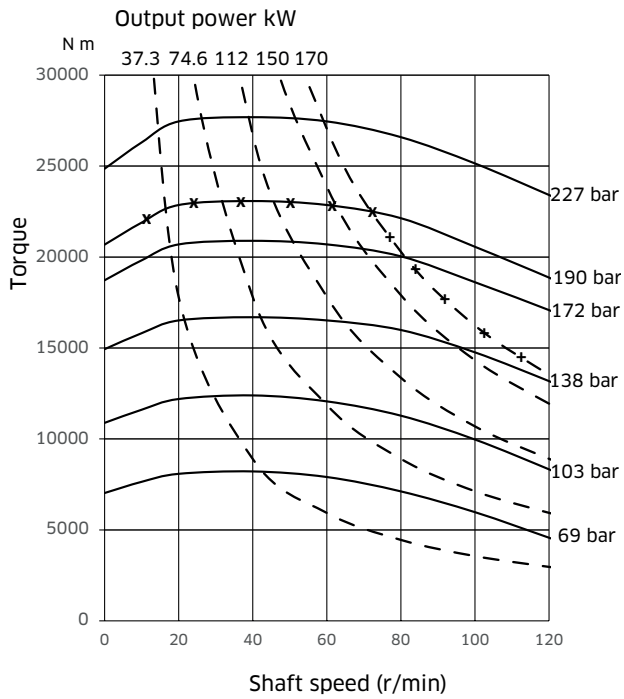

2-2 Volumetric Efficiency Data

Motor Type	Geometric Displacement	Zero Speed Constant	Speed Constant	Creep Speed Constant	Crankcase Leakage Constant
HMB	cc/rev	K_1	K_2	K_3	K_4
HMB030	442	1.04	57.67	2.47	0.59
2-piece HMB030	492	1.15	51.80	2.35	0.59
HMB045	740	1.92	43.36	2.71	1.76
HMB060	983	1.72	29.91	2.35	1.88
HMB080	1,344	1.71	21.62	1.84	1.84
HMB100	1,639	1.63	19.90	1.41	1.88
HM(HD)B125	2,050	2.06	11.45	1.24	1.35
HM(HD)B150	2,470	1.62	9.98	1.00	1.39
HM(HD)B200	3,087	2.53	14.99	0.78	1.39
HM(HD)B270	4,310	3.17	21.16	0.68	1.80
HM(HD)B325	5,310	3.14	18.21	0.55	1.80
HMHDB400	6,800	4.06	10.18	0.53	2.35
HMB500	8,000	9.247	78.247	1.739	5.797

Fluid Viscosity	Viscosity Factor
cSt	Kv
20	1.58
25	1.44
30	1.30
40	1.10
50	1.00
60	0.88

Qt (total leakage) = $[K_1 + n/K_2] \times \Delta P \times Kv \times 0.005$ L/min

Creep speed = $K_3 \times \Delta P \times Kv \times 0.005$ rpm

Crankcase leakage = $K_4 \times \Delta P \times Kv \times 0.005$ L/min

ΔP = differential pressure bar

n = speed rpm

The motor volumetric efficiency can be calculated as follows:

$$\text{Volumetric efficiency (\%)} = \left[\frac{(\text{speed} \times \text{disp.})}{(\text{speed} \times \text{disp.}) + Q_t}\right] \times 100$$

Example:

HMB200 motor with displacement of 3.087 l/rev.

Speed 60rpm

Differential pressure 200bar

Fluid viscosity 50 cSt

Total leakage = $(K_1 + n/K_2) \times \Delta P \times Kv \times 0.005$ L/min

= $(2.53+60/14.99) \times 200 \times 1 \times 0.005$

= 6.53 L/min

$$\text{Volumetric efficiency} = \left[\frac{(60 \times 3.087)}{(60 \times 3.087) + 6.53}\right] \times 100$$

= 96.6%

2-3 Shaft Power Calculation

Example

Firstly, to find the maximum differential pressure ΔP at rated speed:

Select the rated shaft power (W) for the motor from the performance data table (in Section 2-1).
This is presented in kilowatts so must be converted to watts (x1000).

Then also take the actual average running torque in N m/bar (T_o) and the rated shaft speed in rpm (n).

$$W = \frac{T_o \cdot \Delta P \cdot 2\pi \cdot n}{60}$$

Or to find maximum ΔP then use:

$$\Delta P = \frac{60 \cdot W}{2\pi \cdot T_o \cdot n}$$

HMB270 Example:

Rated shaft power, W (W):	140,000
Average actual running torque, T_o (Nm/bar):	63.79
Rated shaft speed, n (rpm):	125

$$\Delta P = \frac{60 \times 140{,}000}{2\pi \times 63.79 \times 125}$$

ΔP= 167 bar (max.)

Secondly, to find the maximum speed at rated pressure (using the same information as before):

$$n = \frac{60 \cdot W}{2\pi \cdot T_o \cdot \Delta P}$$

Rated pressure (bar): 250

$$n = \frac{60 \times 140{,}000}{2\pi \times 63.79 \times 250}$$

n = 83rpm (max.)

In summary, operating the motor within its shaft power limit, at rated speed, would give a maximum pressure of 167 bar, and operating the motor at rated pressure, would give a maximum speed of 83rpm.

Notes

1) The maximum calculated speed is based on a rated inlet pressure of 250bar.
2) The maximum shaft power is only allowable if the motor drain temperature remains below 80°C.
3) The maximum calculated differential pressure assumes that the low pressure motor port is less than 30bar.

2-4 Functional Symbols

HMB030 (Monobloc)

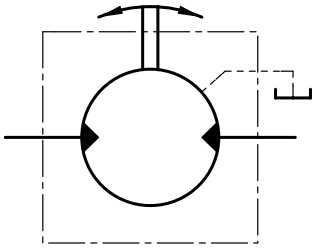

-F(M)3-; F(M)4-; SM3

HMB030*/045*(TPB)
HMB060/080
HMB100/125
HMB150/200

*F(M)3 ONLY

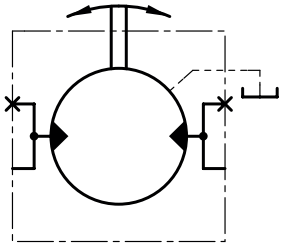

HMB045-**
(Monobloc)

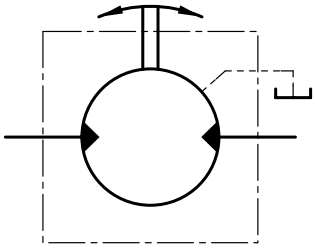

HMHDB400-**-
HMB500

Removable plug

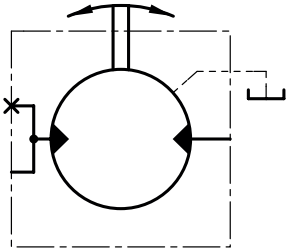

HMB045-**D-
(Monobloc)

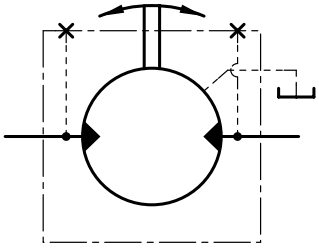

HMHDB400-**-
HMB500

S045

Dual ports

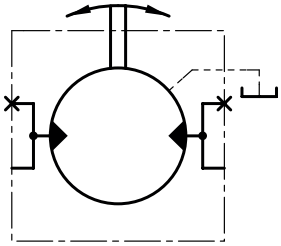

2-5 Stress Limits

When applying large external radial loads, consideration should also be given to motor bearing lives (see Section 2-6).

Motor Frame Size	Shaft Types	Maximum External Radial Bending Moment [Nm]
HMB030	P, S & Z	2,400
HMB045	P, S & Z	3,240
HM060, 080 & 100	P, S, Z & T	5,500
HMB125, 150 & 200	P1, S3, S4, Z3, & T	6,600
HMHDB125, 150, 200	S5, Z5 & P2	12,750
HMB270 & 325	P1, S3, Z3 & T	7,500
HMHDB270 & 325	P2, S5 & Z5	15,900
HMHDB400	P, S & Z	16,200
HMB500	P, S & Z	16,200

Example:

Determine the maximum radial shaft load of a HMB080 motor:

Radial load offset, A = 100mm
Maximum radial load, W = 5,500 (see table)/100
= 55kN (5,607 kg)

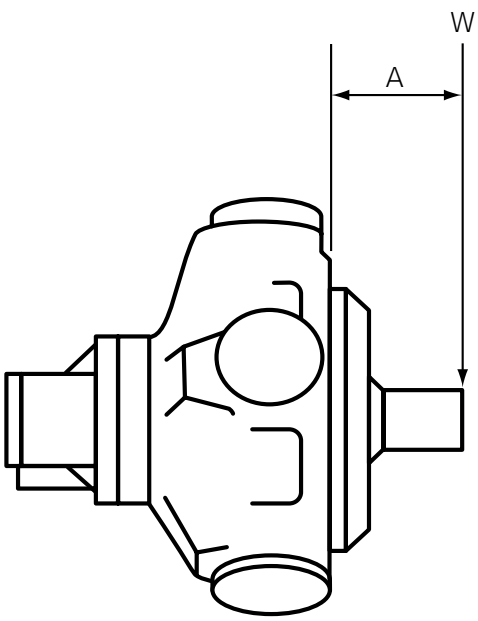

A = Distance from mounting face to load centre (mm)

W = Side load (N)

NOTE:
The offset distance A is assumed to be greater than 50mm. Contact Kawasaki if this is not the case.

2-6 Bearing Life Notes

Consideration should be given to the required motor bearing life in terms of baring service life. The factors that will determine bearing life include:

1) Duty cycle - time spent on and off load

2) Speed

3) Differential pressure

4) Fluid viscosity

5) External radial shaft load

6) External axial shaft load

NOTE:
A heavy duty HM(HD)B motor can be ordered to further improve bearing life.
Consult Kawasaki for a detailed bearing life calculation.

2-7 Circuit and Application Notes

Starting torque

The starting torques shown on the graphs in Section 2-1 are average and will vary with system parameters.

Low Speed Operations

Minimum operating speeds are determined by the hydraulic system and load conditions (load inertia, drive elasticity, etc.) Recommended minimum speeds are shown below:

Model Type	rpm
HMB030	5
HMB045	6
HMB060/080/100	3
HM(HD)B/125/150/200	3
HM(HD)B270/325	2
HMHDB400/HMB500	2

High Back Pressure

When both inlet and outlet ports are pressurised continuously, the lower port pressure must not exceed 70 bar at any time.

NOTE: High back pressure reduces the effective torque output of the motor.

Boost Pressure

When operating as a motor the outlet pressure should equal or exceed the crankcase pressure. If pumping occurs (i.e. overrunning loads) then a positive pressure, "P", is required at the motor ports. Calculate "P" (bar) from the operating formula Boost Formula $P = 1 + \frac{N^2 \times V^2}{K} + C$

Where P is in bar, N = motor speed (rpm), V = motor displacement (cc/rev), C = crankcase pressure (bar) and K=a constant from the table below:

Motor	Porting	Constant (K)
HMB030	Standard - Monobloc	3.7×10^9
	F(M)3 SM3	7.5×10^9
HMB045	Standard - Monobloc	1.3×10^{10}
	F(M)3 SM3	1.6×10^{10}
HMB060, HMB080 & HMB100	F(M)3 SM3	1.8×10^{10}
HM(HD)B125, HM(HD)B150 & HM(HD)B200	FM(3) SM3	4.0×10^{10}
	FM(4)	8.0×10^{10}
HM(HD)B270 & HM(HD)B325	FM(4)	7.2×10^{10}
HMHDB400 & HMB500	SO4 SO45	7.2×10^{10}

2-7 Circuit and Application Notes (cont)

The flow rate of oil needed for the make-up system can be estimated from the crankcase leakage data (see Section 2-1 for calculation method). Allowances should be made for other system losses and also for "fair wear and tear" during the life of the motor, pump and system components.

Cooling Flow

Operating within the continuous rating does not require any additional cooling.

For operating conditions above "continuous", up to the "intermittent" rating, additional cooling oil may be required. This can be introduced through the spare crankcase drain ports.

Consult Kawasaki about such applications.

Motorcase pressure

With the standard shaft seal fitted, the motor casing pressure should not exceed 3.5 bar.

NOTES

1) The casing pressure at all times must not exceed either the motor inlet or outlet pressure.

2) High pressure shaft seals are available for casing pressures of:
10bar for all remaining frame sizes.

3) Check installation dimensions for maximum crankcase drain fitting depth.

CAUTION

For trouble free operation the motor's crankcase pressure must always be lower than both of the motor port pressures:

$$P_{case} < P_{in} \quad \text{and} \quad P_{case} < P_{out}$$

Hydraulic Fluids

Dependent on motor (see model code fluid type - Section 1-1) suitable fluids include:

a) Antiwear hydraulic oils

b) Phosphate ester (HFD fluids)

c) Water glycols (HFC fluids)

d) 60/40% water-in-oil emulsions (HFB fluids)

e) 5/95% oil-in-water emulsions (HFA fluids)

f) Antiwear environmentally acceptable lubricants (EALs)

Some fluids require a reduction in pressure and speed limits. Please see table in Section 1-1.

Viscosity limits when using any fluid except oil-in-water (5/95) emulsions are:

Max. off load:	**2,000cSt** (9270 SUS)
Max. on load:	**150cSt** (695 SUS)
Optimum:	**50cSt** (232 SUS)
Minimum:	**25cSt** (119 SUS)

Temperature limits

Ambient min.	-30°C (-22°F)
Ambient max.	+70°C (158°F)

Max. operating temperature range.

	Mineral oil	**Water containing**
Min	-20°C (-4°F)	+10°C (50°F)
Max.	+80°C (175°F)	+54°C (130°F)

NOTE: To obtain optimum services life from both fluid and hydraulic systems components, a fluid operating temperature of 40°C is recommended.

2-7 Circuit and Application Notes (cont)

Mineral oil recommendations

The fluid should be a good hydraulic grade, non-detergent mineral oil. It should contain anti-oxidant, antifoam and demulsifying additives. It must contain antiwear or extreme pressure (EP) additives. Automatic transmission fluids and motor oils are not recommended.

Biodegradable Fluid Recommendations

Well-designed environmentally acceptable lubricants (EALs) may be used with Staffa motors. The EAL must be designed for use in hydraulic systems and have a synthetic ester base. Additives should be as listed for mineral oils, above. The performance of EALs with hydraulic systems vary widely and so checks for seal compatibility, copper alloy compatibility, oxidation resistance and lubrication properties should be carried out before selecting an EAL. For help with EALs please contact Kawasaki.

Filtration

Full flow filtration (open circuit), or full boost flow filtration (closed circuit) to ensure system cleanliness to ISO4406 code 22/18/13 or cleaner.

Noise levels

The airborne noise level is less than 66.7dB(A) DIN & dB(A) NFPA through the continuous operating envelope. Where noise is a critical factor, installation resonances can be reduced by isolating the motor by elastomeric means from the structure and the return line installation. Potential return line resonances originating from liquid borne noise can be further attenuated by providing a return line back pressure of 2 to 5bar.

Polar moment of intertia and mass table

Motor Frame Size	Polar Moment of Intertia (kg m²) (Typical data)	Mass (kg) (Approx. all models)
HMB030	0.0150	73
HMB045	0.0470	120
HMB060	0.0500	144
HMB080	0.0600	144
HMB100	0.0760	144
HMB125	0.2200	217
HMB150	0.2500	265
HMB200	0.2700	265
HMB270	0.4900	420
HMB325	0.5000	429
HMHDB400 - S04	0.5400	481
HMHDB400 - S045	0.5400	510
HMB500	0.5400	510

2-8 Motor Operation at Low Temperature

When operating the motor at low temperature consideration should be given to the fluid viscosity. The maximum fluid viscosity before the shaft should be turned is 2,000cSt. The maximum fluid viscosity before load is applied to the motor shaft is 150cSt.

If low ambient temperature conditions exist, then a crankcase flushing flow of at least 5 l/min should be applied to the motor during periods when the motor is not in use.

The shaft seal temperature limits for both medium and high pressure applications are shown in the table below.

	Non-operating temperature limits	Minimum operating temperature
Standard pressure shaft seal	below minus 40°C and above 100°C	minus 30°C
High pressure shaft seal	below minus 30°C and above 120°C	minus 15°C

All seals are very brittle below minus 40°C and are likely to break very easily and due to their sluggish response may not provide a 100% leak free condition.

It should be noted that the maximum continuous operating temperature within the motor crankcase is plus 80°C.

2-9 Freewheeling Notes

All Staffa motors can be used in freewheeling applications.

In all circumstances it is essential that the motor is unloaded (A and B ports connected together) and that the circuit is boosted.

The required boost pressure is dependent on both the speed and displacement conditions.

It should be noted that for HMB series motors, to achieve freewheel, large flows will have to re-circulate around the motor.

This will require a large recirculating valve and consideration of circuit cooling as the motor will be generating a braking torque.

It is for these reasons that HMC, HPC or HMF series motors are the preferred option for freewheeling applications.

See catalogues M-2002/03.17, M-2003/03.17 and M-2005/12.17 for details.

2-10 Crankcase Drain Connections

Motor axis - horizontal

The recommended minimum pipe size for drain line lengths up to approx. 5m is 12.0mm (½") bore. Longer drain lines should have their bore size increased to keep the crankcase pressure within limits.

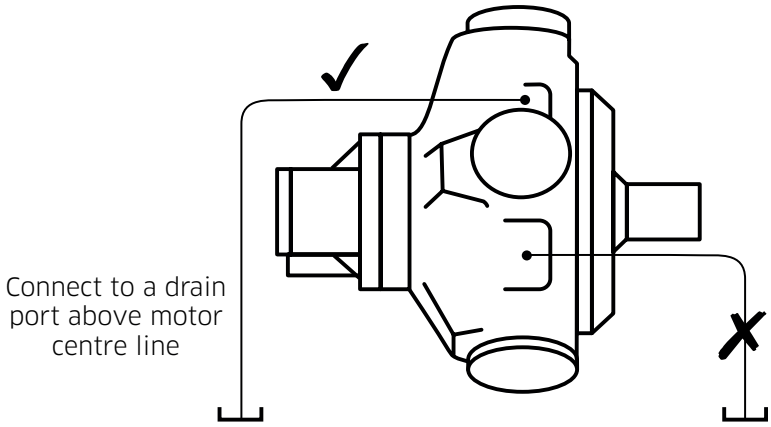

Motor axis - vertical shaft up

Specify "V" within the model code for extra drain port, G¼" (BSPF). Connect this port into the main drain line downstream of a 0.35bar check valve to ensure good bearing lubrication. The piping arrangement must not allow syphoning from the motorcase. (refer to installation drawing for details).

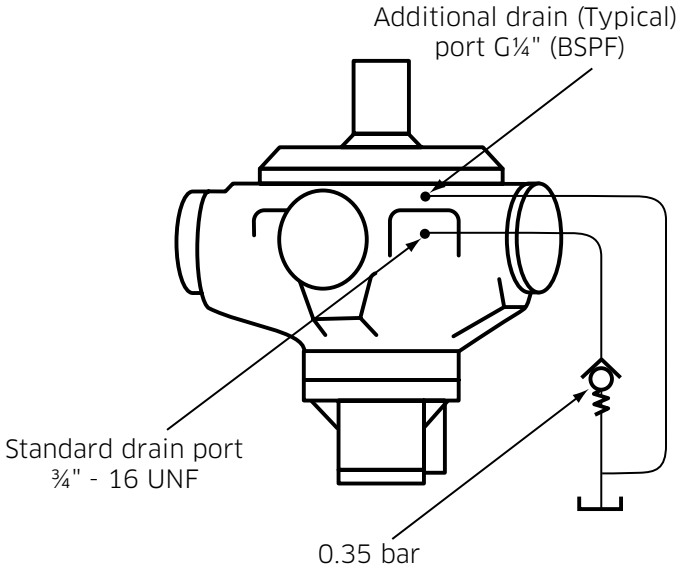

Motor axis - vertical shaft down

The piping, from any drain port, must be taken above the level of the motorcase to ensure good bearing lubrication. The arrangement must not allow syphoning from the motorcase.

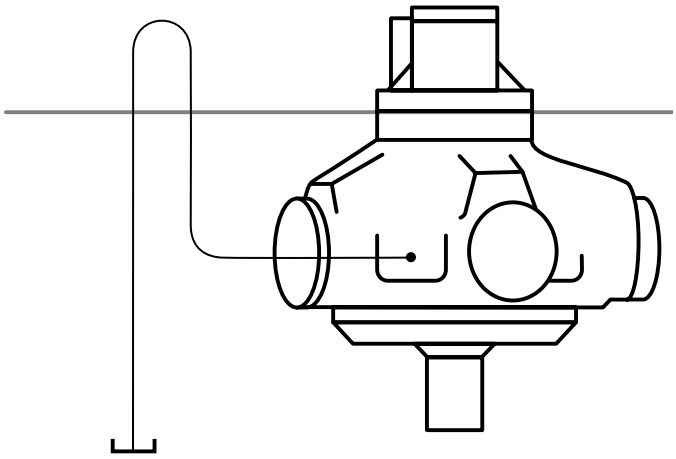

2-11 Installation Data

Spigot

The motor should be located by the mounting spigot on a flat, robust surface using correctly sized bolts.

The diametrical clearance between the motor spigot and the mounting must not exceed 0.15mm. If the application incurs shock loading, frequent reversing or high speed running, then high tensile bolts should be used, including one fitted bolt.

Bolt Torque

The recommended torque wrench setting for bolts is as follows:

M12	97 +/- 7Nm
M14	160 +/- 21Nm
M18	312 +/- 14 Nm
M20	407 +/- 14 Nm
M24	690 +/- 27 Nm
½" UNF	97 +/- 7 Nm
⅝“ UNF	265 +/- 14 Nm
¾“ UNF	393 +/- 14 Nm
1"	810 +/- 27 Nm

Shaft Coupling

Where the motor is solidly coupled to a shaft having independent bearings the shaft must be aligned to within 0.13mm TIR.

End of Motor Life

The motor unit must be completely empty upon disposal. It must be disposed of according to national regulations and safety information for the disposal of hydraulic fluids

All individual parts of the motor unit must be recycled. Separate the motor unit parts according to: cast iron, steel, aluminium, non-ferrous metal, electronic waste, plastic, and seals.

2-12 Special Features

Feature	Section	HMB 030	HMB 030 -F(M)3 HMB 030 -SM3	HMB 045	HMB 045 - F(M)3 HMB 045 - SM3	HMB 060/ 080	HMB 100	HM(HD)B 125	HM(HD)B 150/ 200	HM(HD)B 270	HM(HD)B 325	HMHDB 400	HMB 500
High Pressure Shaft Seal	2-12	●	●	●	●	●	●	●	●	●	●	●	●
Improved Shaft Seal Life	2-12	●	●	●	●	●	●	●	●	●	●	●	●
Improved Cavitation Resistance	2-12	○	●	○	●	●	●	●	●	●	●	●	●
Increased Starting Torque	2-12	●	●	●	●	●	●	●	●	●	●	●	○
Anti-clock-wise Rotation	2-12	●	●	●	●	●	●	●	●	●	●	●	●
Thermal Shock Resistance	2-12	○	●	○	●	●	●	●	●	●	●	●	○
Drain Port Adaptor - ½" BSPP	2-12	●	●	●	●	●	●	●	●	●	●	●	●
Φ21mm Mounting Holes	2-12	○	○	○	○	●	●	●	●	●	●	●	●
Φ22mm Mounting Holes	2-12	○	○	○	○	●	●	●	●	●	●	●	●
Marine-specification Primer Paint	2-12	●	●	●	●	●	●	●	●	●	●	●	●

● Available
○ Not available

If a motor is to be ordered with any special features listed, please contact Kawasaki.

2-12 Special Features (cont)

High Pressure Shaft Seal

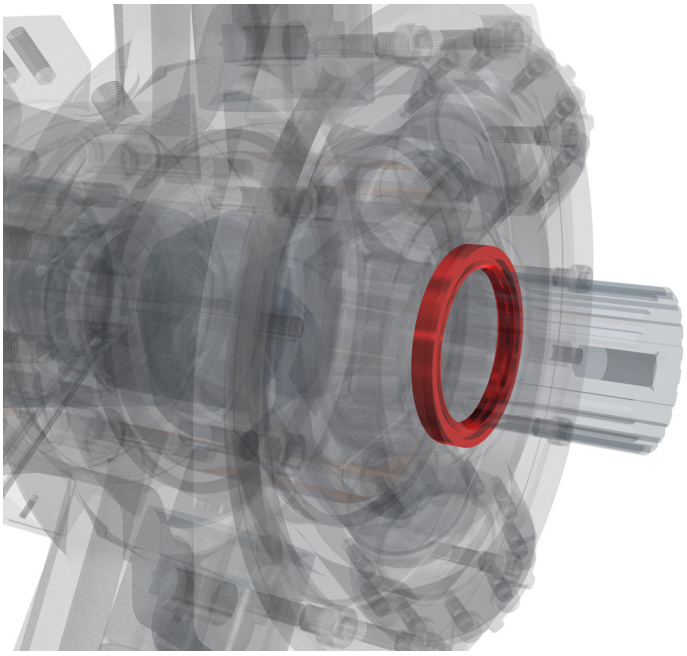

Description:

> 10 bar rated

> Recommended for cold climates

> Rugged aluminium construction

Technical Information

Where crankcase pressure will be higher than 3.5 bar, the high pressure shaft seal should be selected.

Case pressure	≤ 10bar
Non-operating temperature limits	Below -30°C and above 120°C
Minimum operating temperature	-15°C
Maximum operating temperature	80°C
Minimum viscosity	2,000cSt
Maximum viscosity	150cSt

Applicable to:

HMB 030	HMB 030 -F(M)3/ SM3	HMB 045	HMB 045 -F(M)3/ SM3	HMB 060/ 080	HMB 100	HM(HD)B 125	HM(HD)B 150/200	HM(HD)B 270	HM(HD)B 325	HMHDB 400	HMB 500
●	●	●	●	●	●	●	●	●	●	●	●

Please contact Kawasaki to order this feature.

2-12 Special Features (cont)

Improved Shaft Seal Life

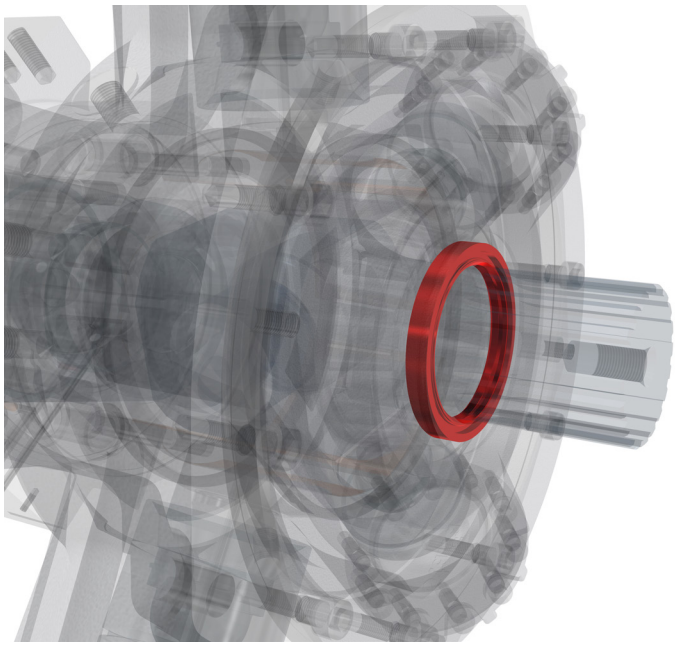

Description:

> Stainless steel sleeve prevents corrosion

> Improved wear resistance

> Recommended for corrosive environments

Technical Information

A well-established method of increasing rotary seal life in corrosive environments is to fit a thin-walled, stainless steel sleeve to the rotating shaft to provide a corrosion-resistant, wear-resistant counterface surface for the seal to run against. All HMB motors can be fitted with such sleeves upon request.

Sleeve material	A304/301 Stainless Steel
Sleeve surface finish	R_a 0.25 to 0.5µm (10 to 20µin)

Applicable to:

HMB 030	HMB 030 -F(M)3/ SM3	HMB 045	HMB 045 -F(M)3/ SM3	HMB 060/ 080	HMB 100	HM(HD)B 125	HM(HD)B 150/200	HM(HD)B 270	HM(HD)B 325	HMHDB 400	HMB 500
●	●	●	●	●	●	●	●	●	●	●	●

Please contact Kawasaki to order this feature.

2-12 Special Features (cont)

Improved Cavitation Resistance

Description:

> **Recommended for overunning applications**

> **Protects against seal damage for short periods of operation in vacuum inlet conditions.**

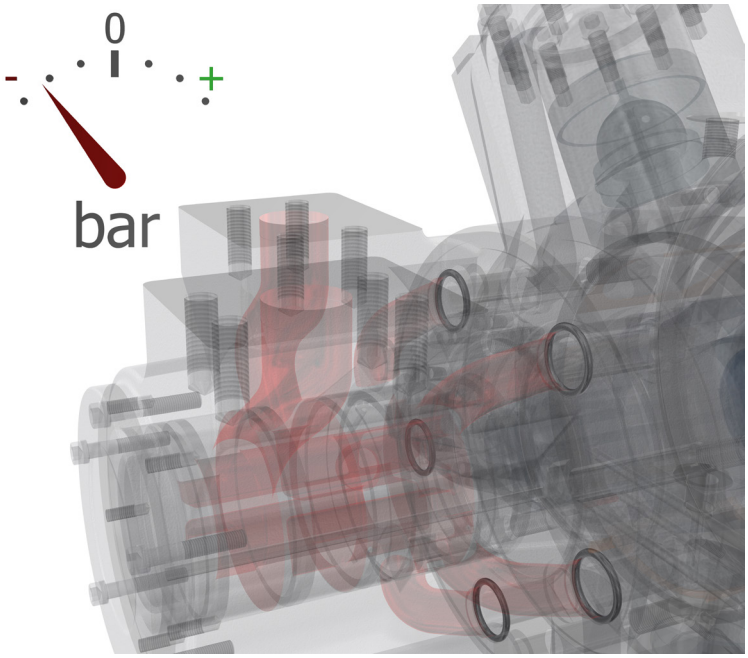

Cavitation can occur due to many different factors. Although it is not possible to make the HMB motor resistant to cavitation, certain features can be added to improve the motor's resistance to short periods of lost port pressure.

In applications where the HMB motor can be driven (like a pump) a risk arises that insufficient fluid will be provided to maintain a positive pressure at both main ports of the motor causing cavitation. The results of extended running at these conditions can be catastrophic to the motor's function.

The improved cavitation resistance feature should be considered where:

- Overrunning conditions may occur (load driving the motor)
- Loss of main port pressure while motor is rotating

NOTE:
This feature comes as standard on monobloc HMB motors (HMB030, HMB045).

Applicable to:

HMB 030	HMB 030 -F(M)3/ SM3	HMB 045	HMB 045 -F(M)3/ SM3	HMB 060/ 080	HMB 100	HM(HD)B 125	HM(HD)B 150/200	HM(HD)B 270	HM(HD)B 325	HMHDB 400	HMB 500
○	○	○	●	●	●	●	●	●	●	●	●

Please contact Kawasaki to order this feature.

2-12 Special Features (cont)

Increased Starting Torque

Description:

> Optimised for high break-out torque

> Recommended for low speed operation

> Improved service life for low speed applications

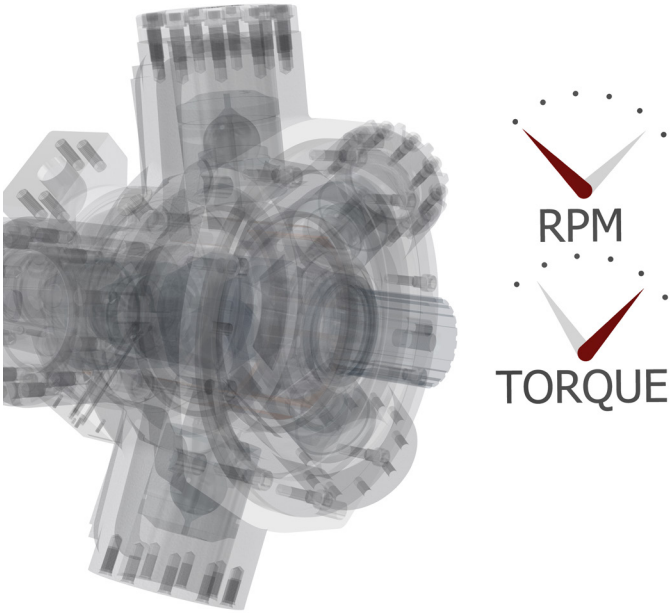

Technical Information

If an application demands the drive motor be run at speeds of less than 10 rpm for most of the duty cycle, or involves frequent start/stop or forward/reverse operation, the Staffa HMB motor range has it covered.

By optimising the HMB motor's design for low speeds, it is possible to increase the break out torque and low speed mechanical efficiency performance.

All figures given in Section 2-1 Performance Data are still valid when selecting this feature.

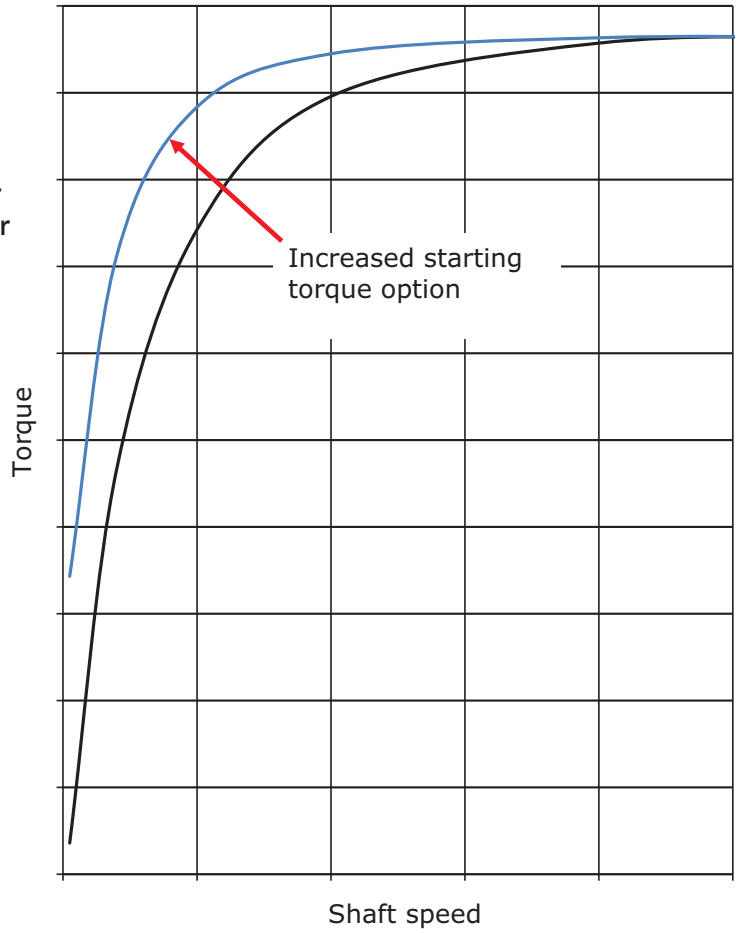

2-12 Special Features (cont)

Increased Starting Torque (cont)

Volumetric Performance

In order to achieve increased torque at low speeds the volumetric characteristics of the motor performance are changed.

When calculating leakage and volumetric efficiency use the constants shown here in place of those given for the standard motor in Section 2-1.

Motor Type	Geometric Displacement	Zero Speed Constant	Speed Constant	Creep Speed Constant	Crankcase Leakage Constant
	cc/rev	K1	K2	K3	K4
HMB030	442	8.62	51.80	17.54	8.06
HMB030 2-piece	492	8.51	57.67	19.37	8.06
HMB045	740	3.93	43.36	12.80	9.23
HMB060	983	9.19	29.91	9.95	9.35
HMB080	1,344	9.18	21.62	7.39	9.31
HMB100	1,639	9.10	19.90	5.97	9.35
HM(HD)B125	2,050	9.53	11.45	4.88	8.82
HM(HD)B150	2,470	9.09	9.98	4.02	8.86
HM(HD)B200	3,087	10.00	14.99	3.20	8.86
HM(HD)B270	4,310	13.63	21.16	3.11	12.26
HM(HD)B325	5,310	13.60	18.21	2.52	12.26
HMHDB400	6,800	19.00	10.18	2.73	17.29

Applicable to:

HMB 030	HMB 030 -F(M)3/ SM3	HMB 045	HMB 045 -F(M)3/ SM3	HMB 060/ 080	HMB 100	HM(HD)B 125	HM(HD)B 150/200	HM(HD)B 270	HM(HD)B 325	HMHDB 400	HMB 500
●	●	●	●	●	●	●	●	●	●	●	○

Please contact Kawasaki to order this feature.

2-12 Special Features (cont)

Anti-Clockwise Rotation

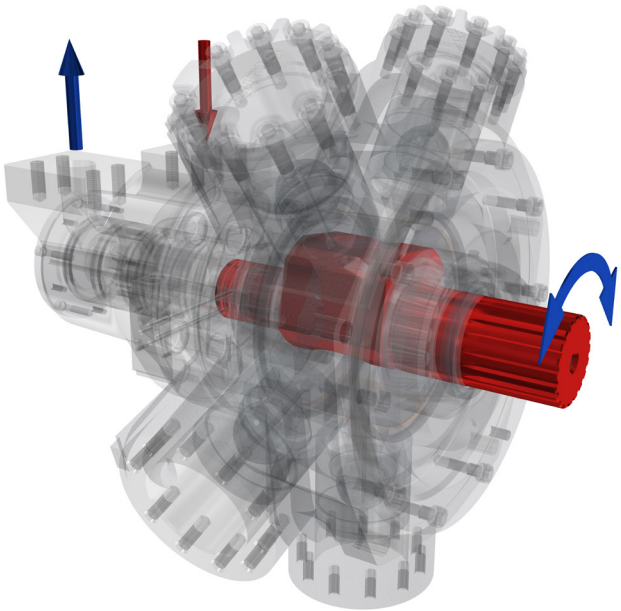

Description:

> Reduce installation complexity

> Standardise equipment designs

Technical Information

All HMB motors can be specified with an anti-clockwise rotation valve configuration. All performance and volumetric characteristics remain unchanged.

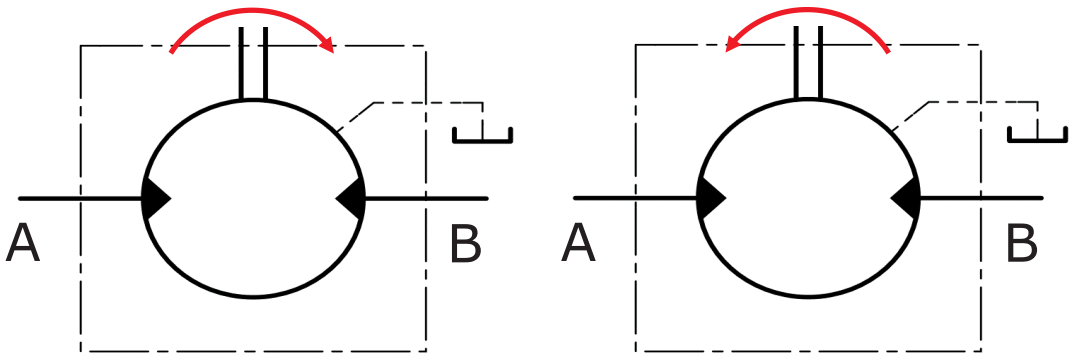

Standard motor

Anti-clockwise motor

Applicable to:

HMB 030	HMB 030 -F(M)3/ SM3	HMB 045	HMB 045 -F(M)3/ SM3	HMB 060/ 080	HMB 100	HM(HD)B 125	HM(HD)B 150/200	HM(HD)B 270	HM(HD)B 325	HMHDB 400	HMB 500
●	●	●	●	●	●	●	●	●	●	●	●

Please contact Kawasaki to order this feature.

2-12 Special Features (cont)

Thermal Shock Resistance

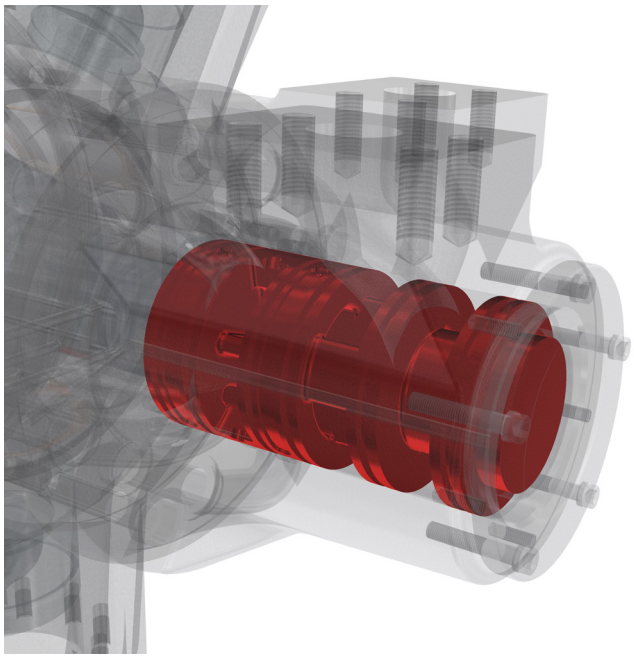

Description:

> Recommended for cold climates

> Optimised for start-up in freezing temperatures

> Engineered for total peace of mind

Technical Information

Starting up a cold system with warm hydraulic fluid is a known cause of heavy wear and potential seizure of hydraulic machinery. To minimise this potential risk, the HMB motor can be configured to combat thermal shocks to give complete peace of mind when operating in very cold climates.

Volumetric Performance

In order to provide thermal shock resistance the volumetric characteristics of the motor performance are changed. When calculating leakage and volumetric efficiency use the constants shown in Section 2-12 in place of those given for the standard motor in Section 2-1.

All figures given in Section 2-1 Performance Data are still valid when selecting this feature.

Note:
When operating at low temperature, consideration must be given to the guidance notes in Section 2-8 Motor Operation at Low Temperature.

2-12 Special Features (cont)

Thermal Shock Resistance (cont)

Motor Type	Geometric Displacement	Zero Speed Constant	Speed Constant	Creep Speed Constant	Crankcase Leakage Constant
	cc/rev	K1	K2	K3	K4
HMB060	983	3.72	29.91	4.39	1.88
HMB080	1,344	3.71	21.62	3.32	1.84
HMB100	1,600	3.63	19.90	2.63	1.88
HM(HD)B125	2,050	4.41	11.45	2.21	1.35
HM(HD)B150	2,470	3.97	9.98	1.81	1.39
HM(HD)B200	3,087	4.88	14.99	1.43	1.39
HM(HD)B270	4,310	5.52	21.16	1.23	1.80
HM(HD)B325	5,310	5.49	18.21	0.99	1.80
HMHDB400	6,800	6.41	10.18	0.88	2.35

Applicable to:

HMB 030	HMB 030 -F(M)3/ SM3	HMB 045	HMB 045 -F(M)3/ SM3	HMB 060/ 080	HMB 100	HM(HD)B 125	HM(HD)B 150/200	HM(HD)B 270	HM(HD)B 325	HMHDB 400	HMB 500
○	○	○	●	●	●	●	●	●	●	●	○

Please contact Kawasaki to order this feature.

2-12 Special Features (cont)

Drain Port Adaptors

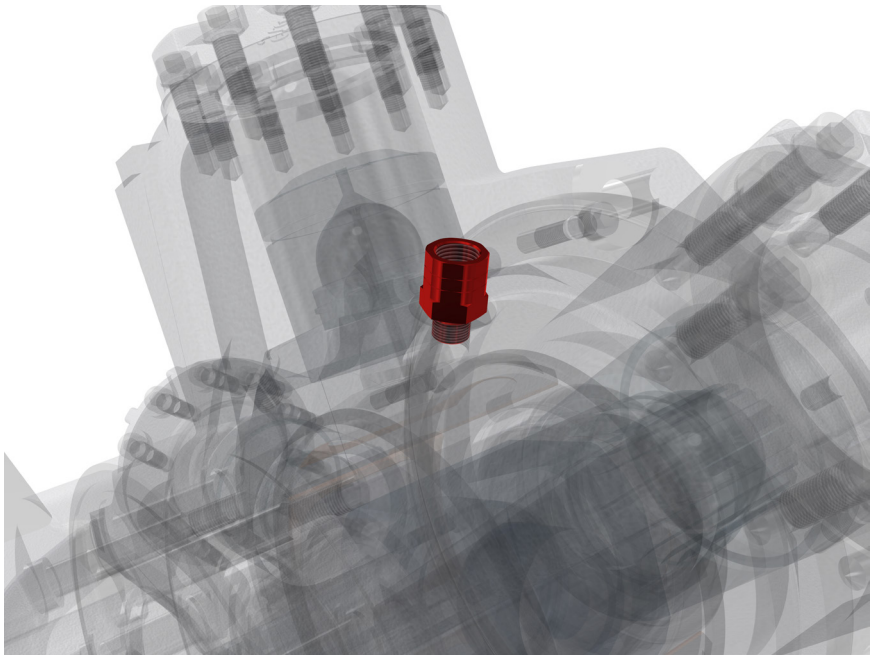

Description:

> Improves manufacturing logistics

> Motor supplied ready for connection to ½" BSPP male fitting

Technical Information

Motor Type	Adaptor Supplied
HMB030	⅜" BSP to ½" BSPP
HMB045	⅜" BSP to ½" BSPP
HMB045-F(M)3/SM3	¾" UNF 2B to ½" BSPP
HMB060	¾" UNF 2B to ½" BSPP
HMB080	¾" UNF 2B to ½" BSPP
HMB100	¾" UNF 2B to ½" BSPP
HM(HD)B125	¾" UNF 2B to ½" BSPP

Motor Type	Adaptor Supplied
HM(HD)B150	¾" UNF 2B to ½" BSPP
HM(HD)B200	¾" UNF 2B to ½" BSPP
HM(HD)B270	¾" UNF 2B to ½" BSPP
HM(HD)B325	¾" UNF 2B to ½" BSPP
HMHDB400	¾" UNF 2B to ½" BSPP
HMB500	¾" UNF 2B to ½" BSPP

One or two drain adaptors can be supplied.

Applicable to:

HMB 030	HMB 030 -F(M)3/ SM3	HMB 045	HMB 045 -F(M)3/ SM3	HMB 060/ 080	HMB 100	HM(HD)B 125	HM(HD)B 150/200	HM(HD)B 270	HM(HD)B 325	HMHDB 400	HMB 500
●	●	●	●	●	●	●	●	●	●	●	●

Please contact Kawasaki to order this feature.

2-12 Special Features (cont)

Mounting Hole Diameter

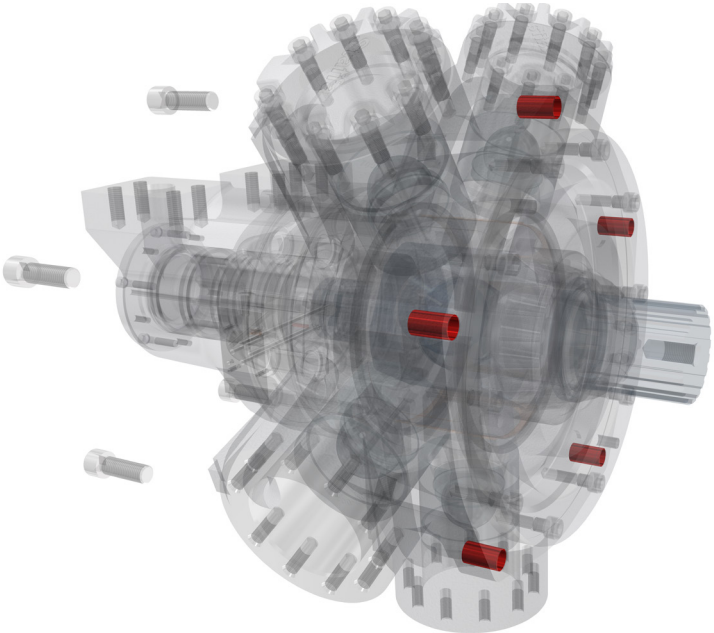

Description:

> Matching mounting holes to bolts

> Φ21mm and Φ22mm options available

Technical Information

In different markets, different bolt standards are adopted which may not be best suited to the standard Φ20mm mounting hole diameter on the HMB motors. To give a correct fit and optimum installation, Φ21mm or Φ22mm holes can be selected on larger frame sizes.

Applicable to:

HMB 030	HMB 030 -F(M)3/ SM3	HMB 045	HMB 045 -F(M)3/ SM3	HMB 060/ 080	HMB 100	HM(HD)B 125	HM(HD)B 150/200	HM(HD)B 270	HM(HD)B 325	HMHDB 400	HMB 500
○	○	○	○	●	●	●	●	●	●	●	●

Please contact Kawasaki to order this feature.

2-12 Special Features (cont)

Marine Specification Primer Paint

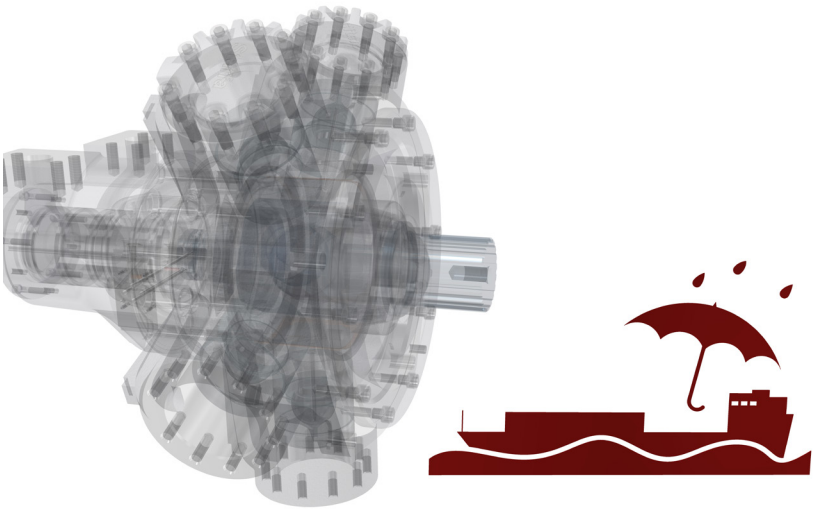

Description:

> Improves corrosion and water resistance of the finishing system

> Excellent adhesion strength

> Recommended for marine applications

Technical Information

Colour	Red oxide
Type	Single pack epoxy etching primer
Standard	BS 3900 part A 8
Dry film thickness	> 12μm

Applicable to:

HMB 030	HMB 030 -F(M)3/ SM3	HMB 045	HMB 045 -F(M)3/ SM3	HMB 060/ 080	HMB 100	HM(HD)B 125	HM(HD)B 150/200	HM(HD)B 270	HM(HD)B 325	HMHDB 400	HMB 500
●	●	●	●	●	●	●	●	●	●	●	●

Please contact Kawasaki to order this feature.

2-12 Special Features (cont)

Tj speed sensor technical specification

The Tj speed sensor is a hall effect dual channel speed probe that can provide feedback of both speed and direction.

Signal Outputs:	Square wave plus directional signal
Power Supply:	8 to 32V @ 40mA
Protection Class:	IP68
Output Frequency:	16 pulses/revolution

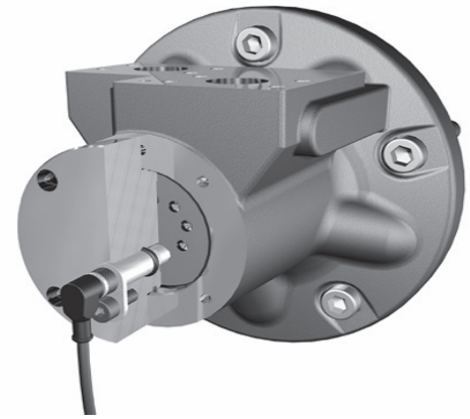

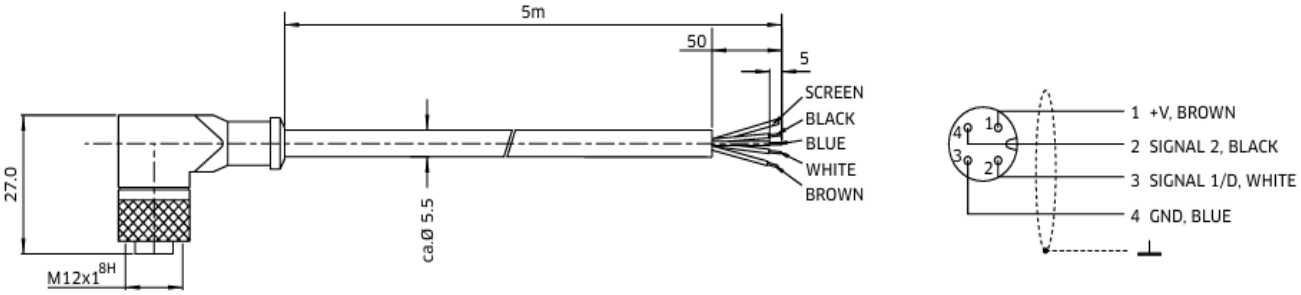

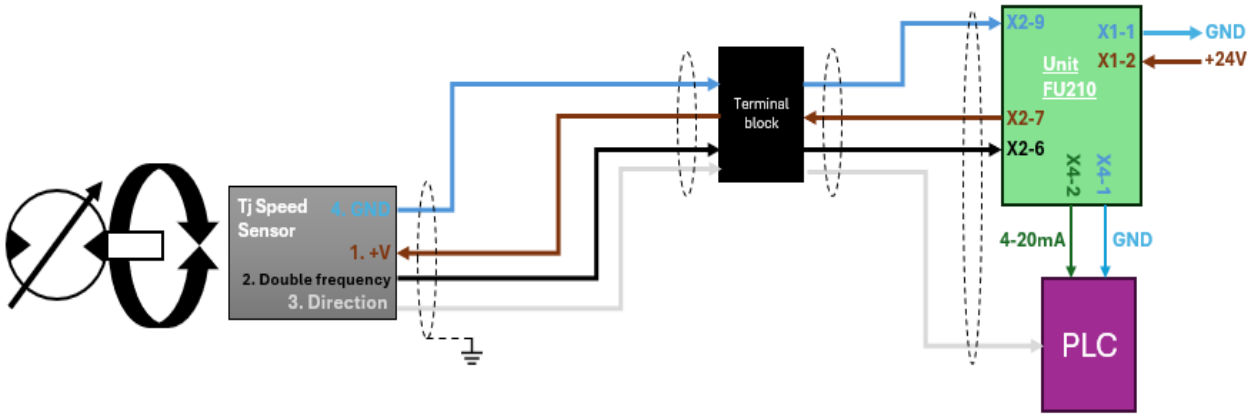

2-12 Special Features (cont)

Ts readout option

The Ts option consists of the Tj speed sensor together with the optional FU210 output module.

The addition of the FU210 module provides a software configured single channel tachometer and relay with a /4-20mA analogue current output which comes pre-programmed with the motor.

For more in-depth information please contact KPM UK.

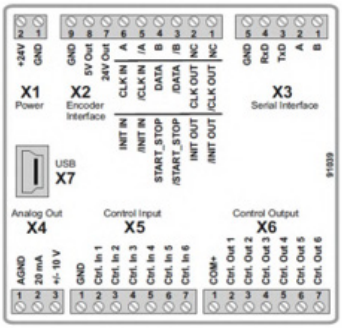

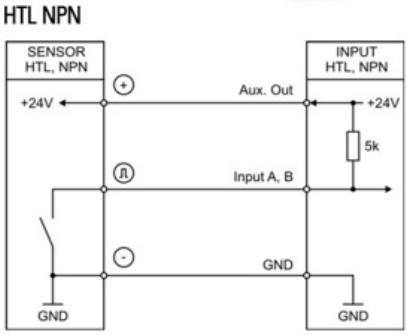

Installation Details

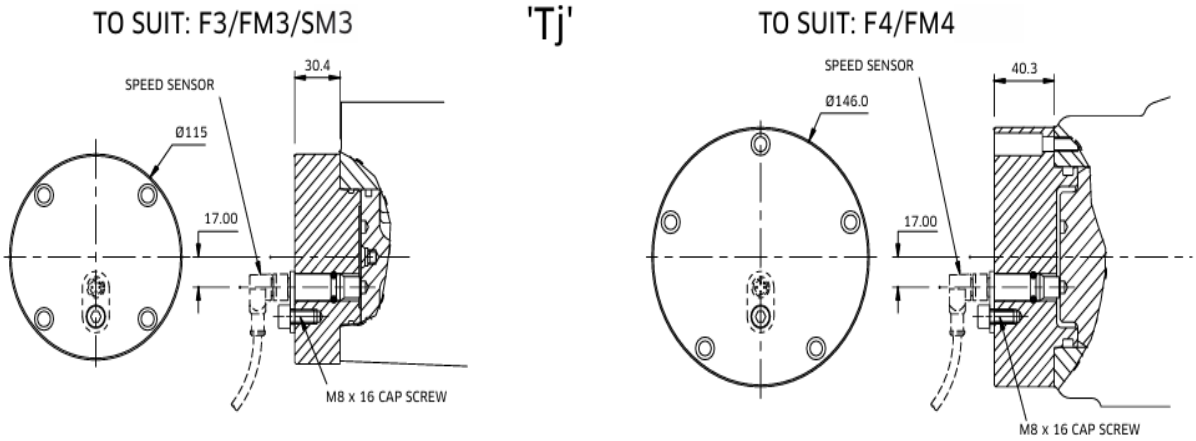

3-1 HMB030

Monobloc - 'P', 'S' and 'Z' Shafts

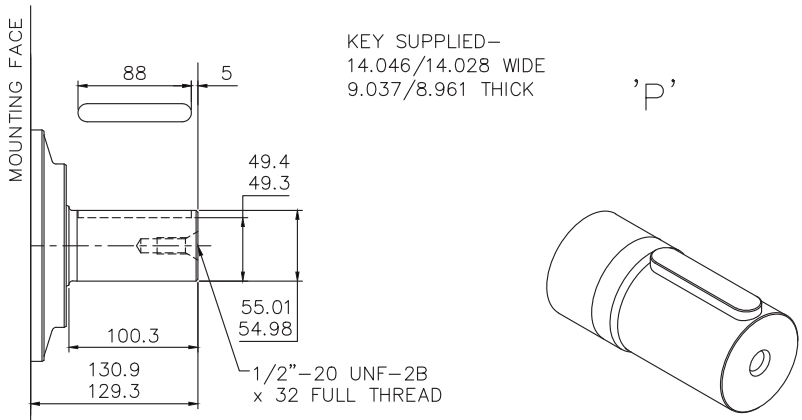

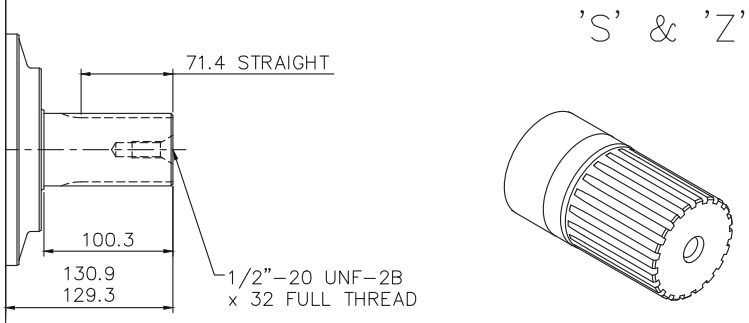

SPLINE DATA

'S'	
TO BS 3550 (ANSI B92.1 CLASS 5)	
FLAT ROOT SIDE FIT, CLASS 1	
PRESSURE ANGLE	30°
NUMBER OF TEETH	17
PITCH	8/16
MAJOR DIAMETER	56.41/56.28
FORM DIAMETER	50.703
MINOR DIAMETER	50.07/49.60
PIN DIAMETER	6.096
DIAMETER OVER PINS	62.985/62.931

'Z'
DIN 5480, W55 X 3 X 17 X 7h

3-1 HMB030 (cont)

2 Piece - 'P', 'S' and 'Z' Shafts

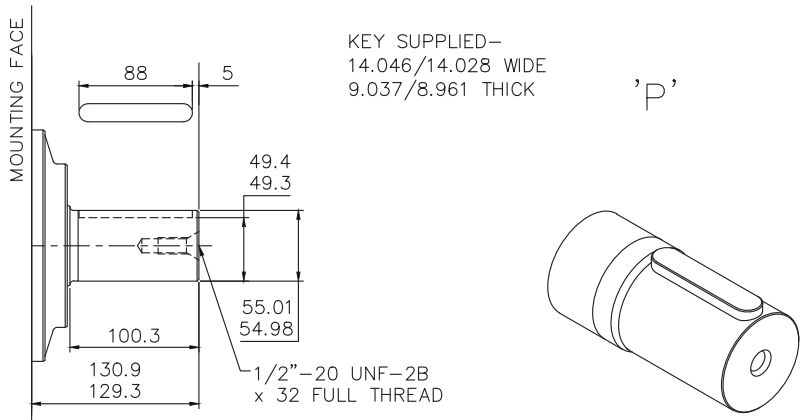

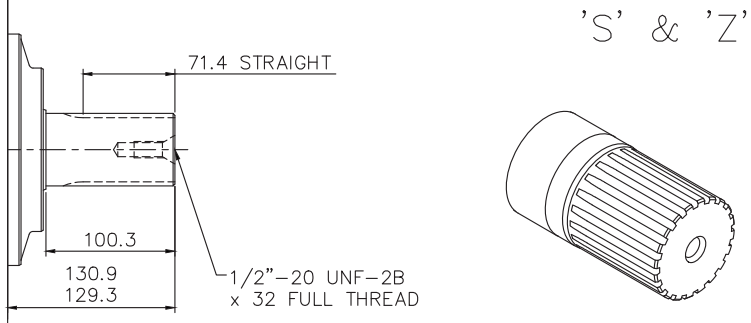

SPLINE DATA

'S'	
TO BS 3550 (ANSI B92.1 CLASS 5)	
FLAT ROOT SIDE FIT, CLASS 1	
PRESSURE ANGLE	30°
NUMBER OF TEETH	17
PITCH	8/16
MAJOR DIAMETER	56.41/56.28
FORM DIAMETER	50.703
MINOR DIAMETER	50.07/49.60
PIN DIAMETER	6.096
DIAMETER OVER PINS	62.985/62.931

'Z'
DIN 5480, W55 X 3 X 17 X 7h

3-1 HMB030 (cont)

2 Piece - Installation

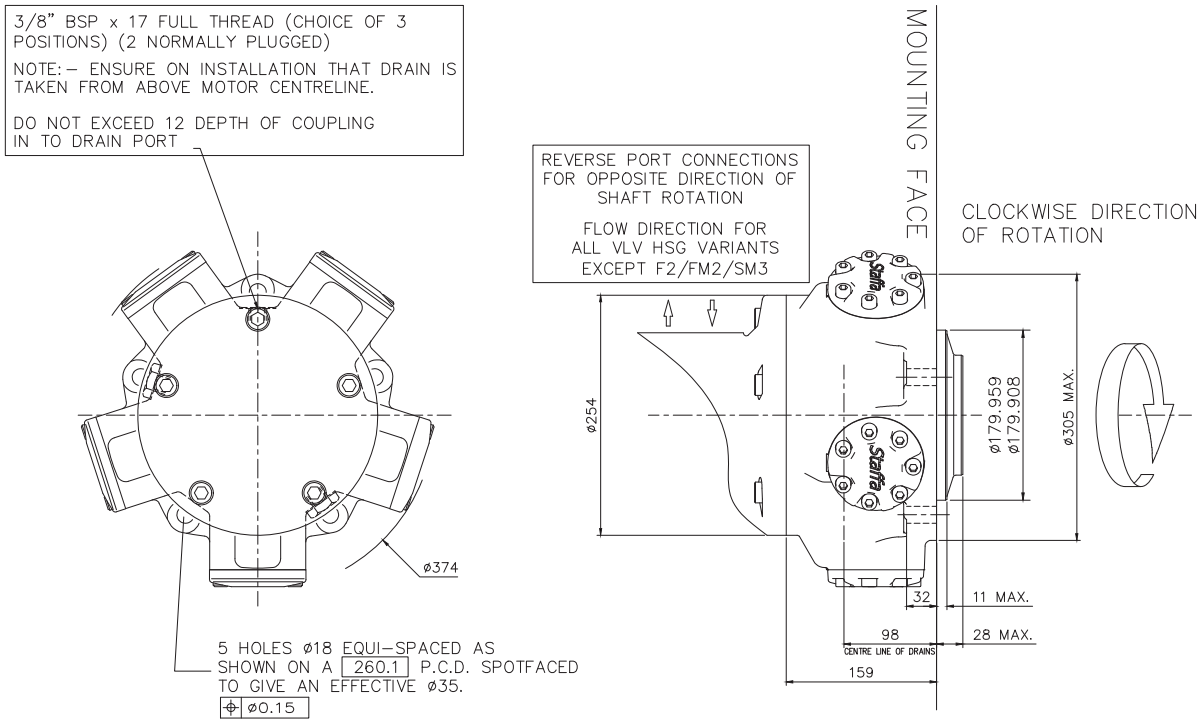

3-1 HMB030 (cont)

Monobloc - Side Port Installation

2 PORTS ø25 TO SUIT SAE
CODE 61, 1" NOM. SPLIT FLANGE

PORT FLANGE BOLT TAPPING SIZE –
F: 3/8"–16 UNC–2B X 16 FULL THREAD DEPTH
FM: M10 X P1.5 X 16 FULL THREAD DEPTH

EXAMPLE FOR MODEL CODE.
SIDE ENTRY MOTORCASE – HMB030/P/FM/21

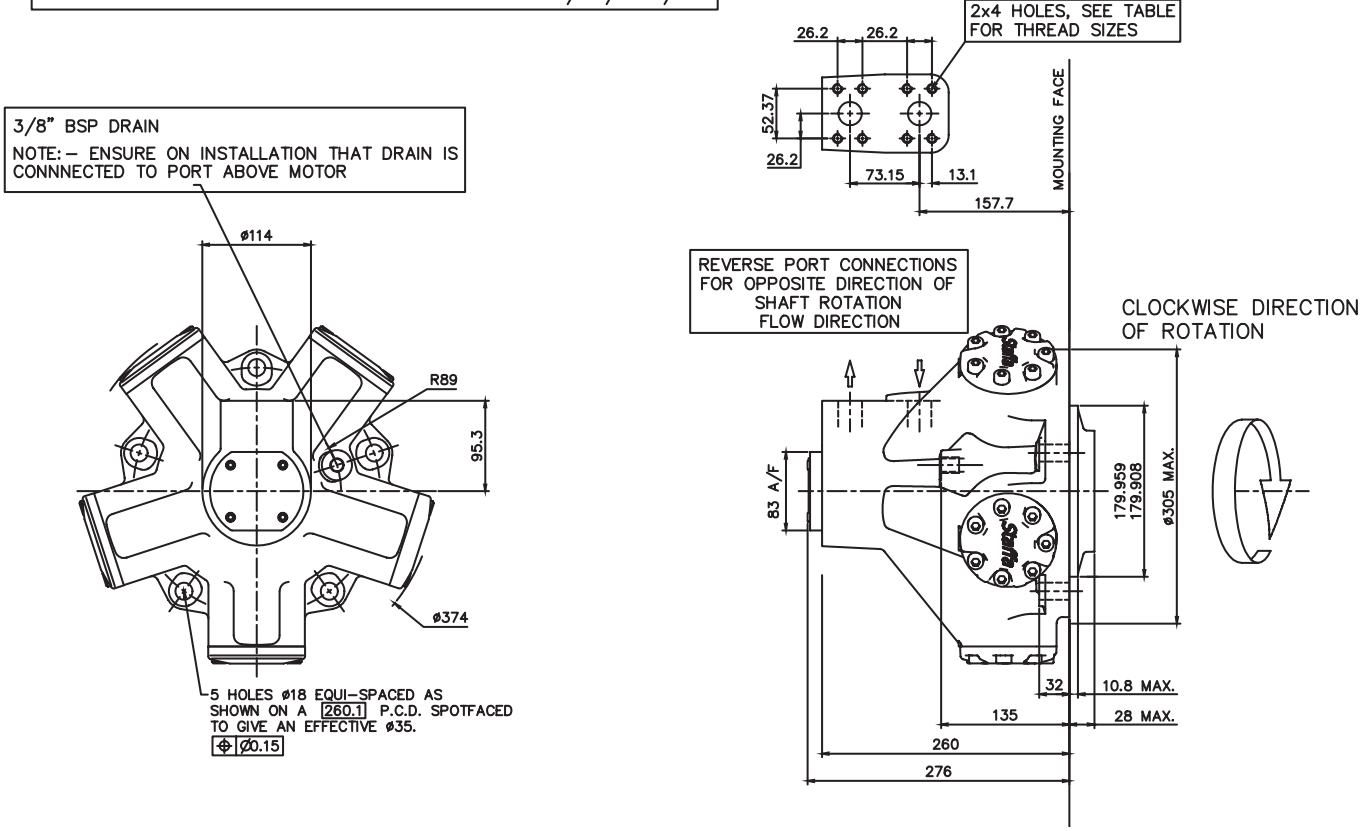

3-2 HMB045

Monobloc - 'P', 'S' & 'Z' Shafts

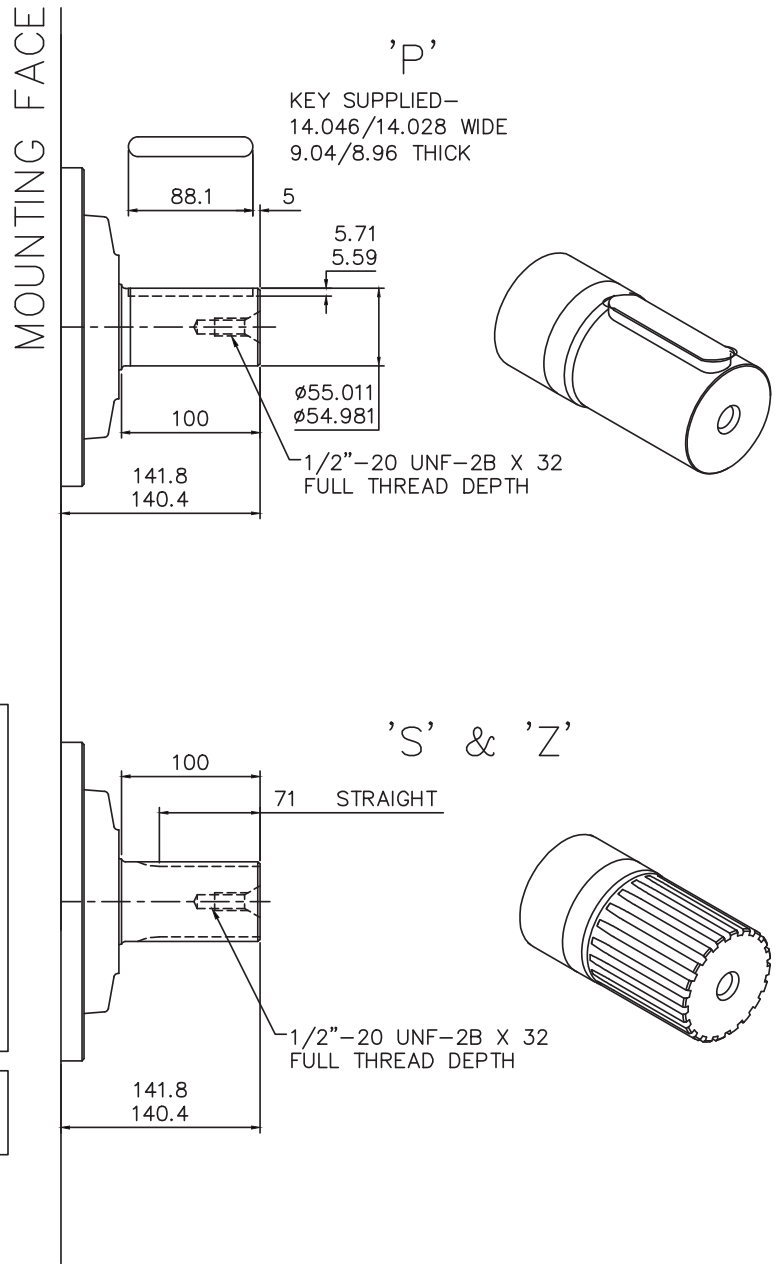

SPLINE DATA

'S'	
TO BS 3550 (ANSI B92.1 CLASS 5)	
FLAT ROOT SIDE FIT, CLASS 1	
PRESSURE ANGLE	30°
NUMBER OF TEETH	17
PITCH	8/16
MAJOR DIAMETER	56.41/56.29
FORM DIAMETER	50.703
MINOR DIAMETER	50.06/49.60
PIN DIAMETER	6.096
DIAMETER OVER PINS	62.984/62.931

'Z'
DIN 5480 W55 x 3 x 17 x 7h

3-2 HMB045 (cont)

2 Piece - 'P', 'S', 'Z' & Q Shafts

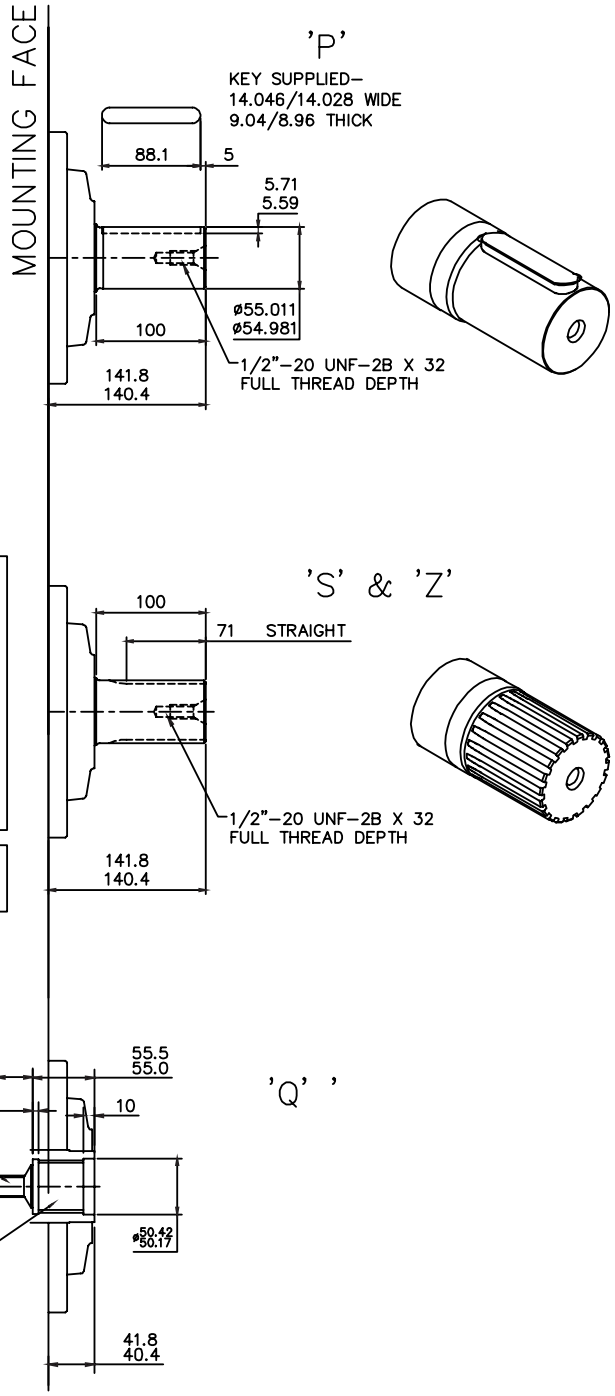

SPLINE DATA

'S'	
TO BS 3550 (ANSI B92.1 CLASS 5)	
FLAT ROOT SIDE FIT, CLASS 1	
PRESSURE ANGLE	30°
NUMBER OF TEETH	17
PITCH	8/16
MAJOR DIAMETER	56.41/56.29
FORM DIAMETER	50.703
MINOR DIAMETER	50.06/49.60
PIN DIAMETER	6.096
DIAMETER OVER PINS	62.984/62.931

'Z'
DIN 5480 W55 x 3 x 17 x 7h

TO BS 3550	
FLAT ROOT SIDE FIT	
PRESSURE ANGLE	30°
NUMBER OF TEETH	21
PITCH	12/24
MAJOR DIAMETER	46.57/46.90
FORM DIAMETER	46.14
MINOR DIAMETER	42.33/42.46
PIN DIAMETER	3.66 flatted to 3.56
DIAMETER BETWEEN PINS	39.17/39.10

3-2 HMB045 (cont)

2 Piece - Installation

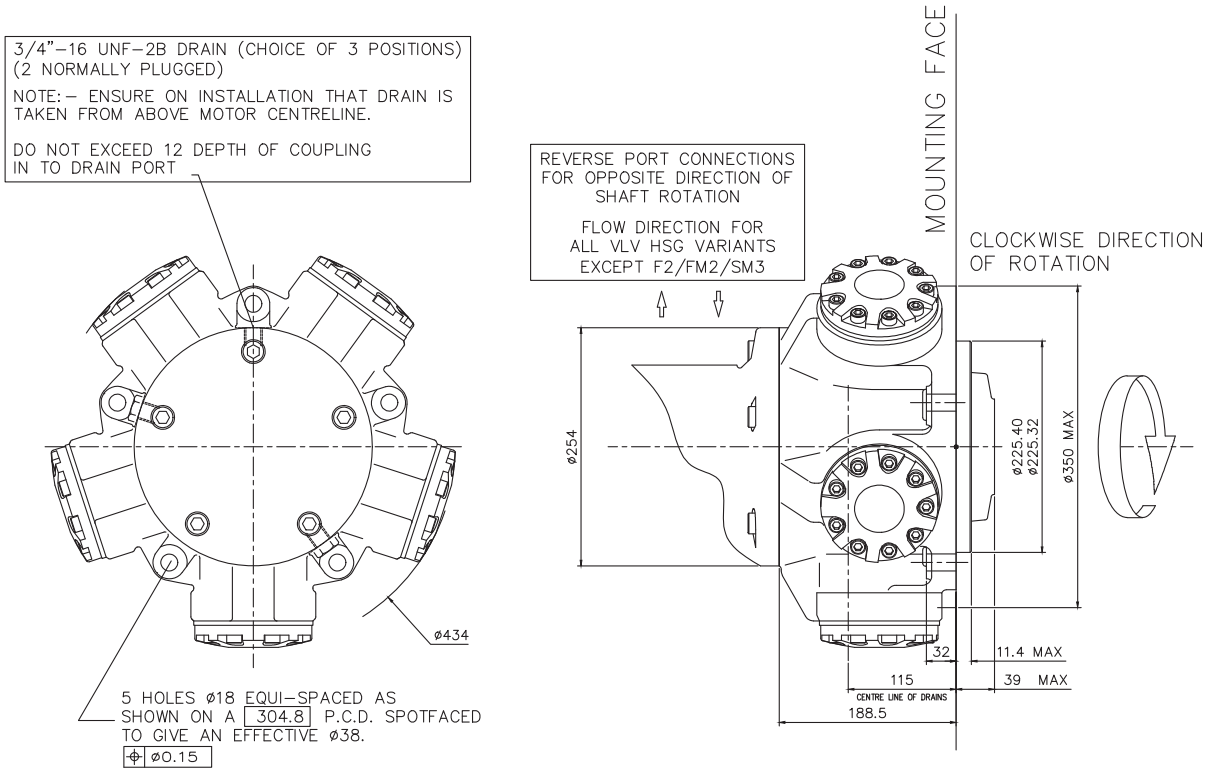

Monobloc - Installation

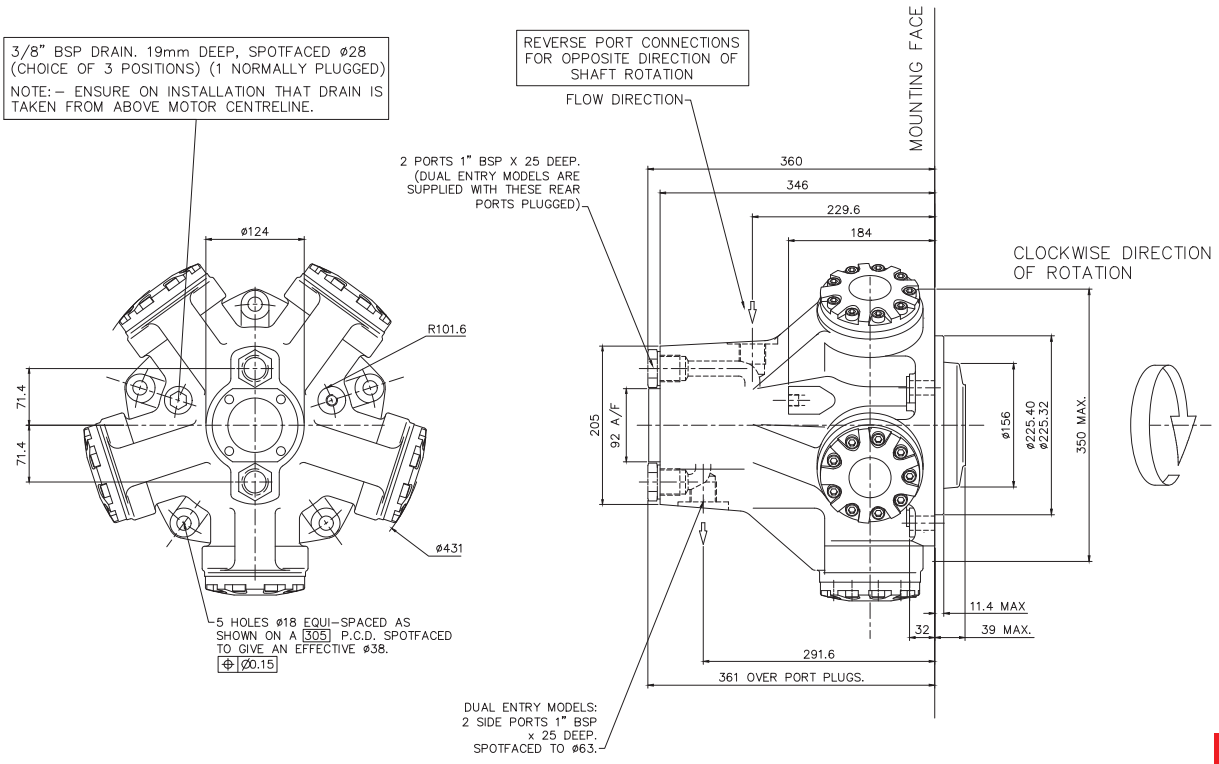

3-3 HMB060/080

'P', 'S' & 'Z' Shafts

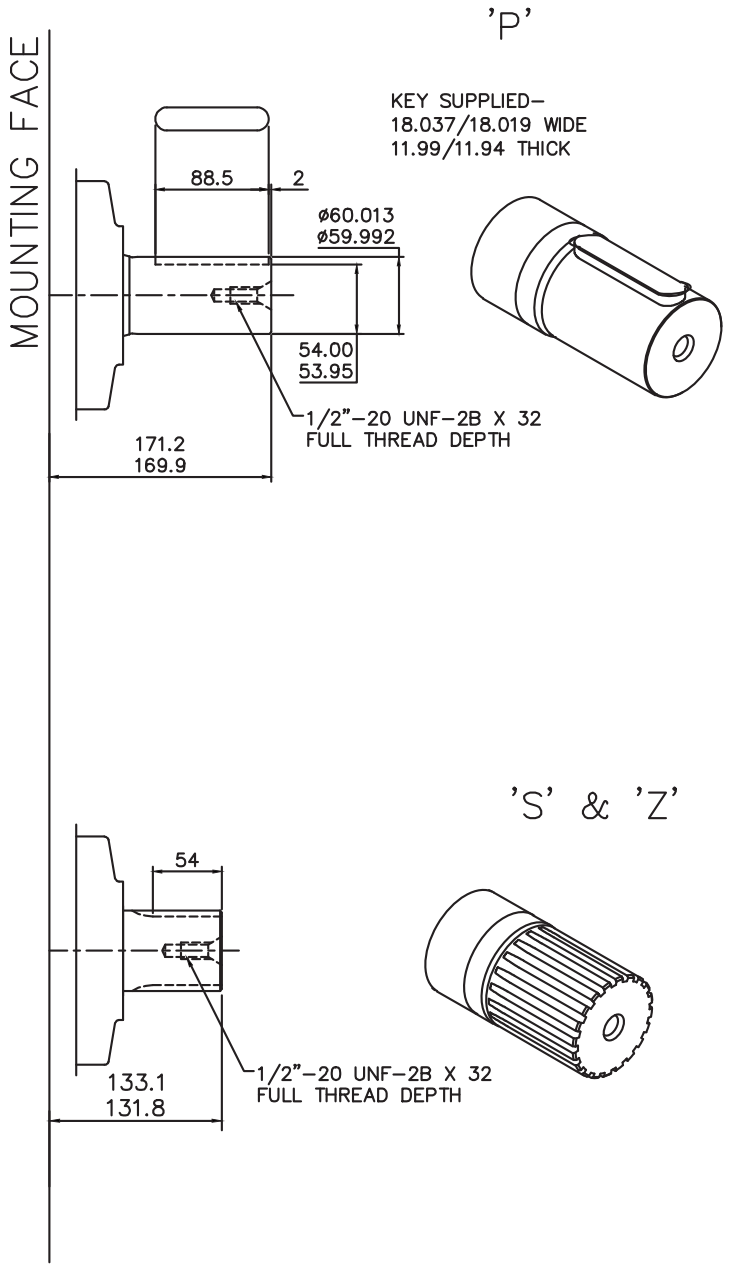

SPLINE DATA

'S'	
TO BS 3550 (ANSI B92.1 CLASS 5)	
FLAT ROOT SIDE FIT, CLASS 1	
PRESSURE ANGLE	30°
NUMBER OF TEETH	14
PITCH	6/12
MAJOR DIAMETER	62.553/62.425
FORM DIAMETER	55.052
MINOR DIAMETER	54.084/53.525
PIN DIAMETER	8.128
DIAMETER OVER PINS	71.593/71.544

'Z'
DIN 5480 W70 x 3 x 30 x 22 x 7h

3-3 HMB060/080 (cont)

'T' & 'Q' Shafts

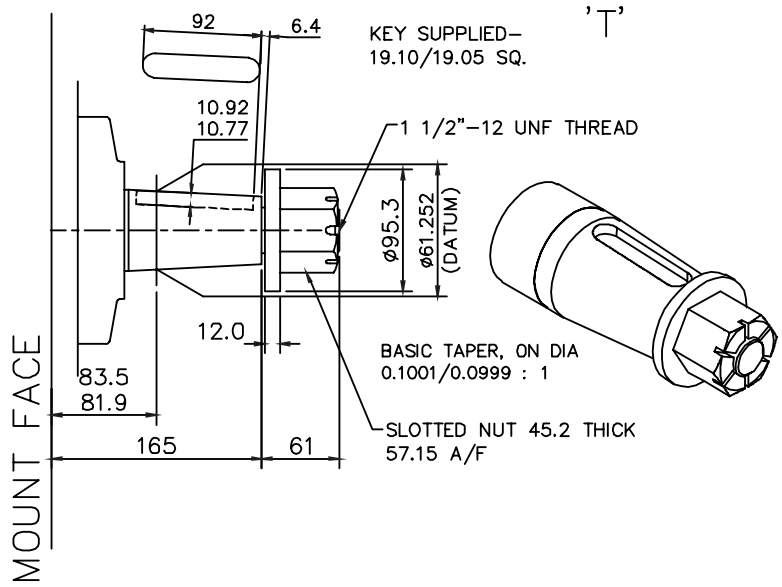

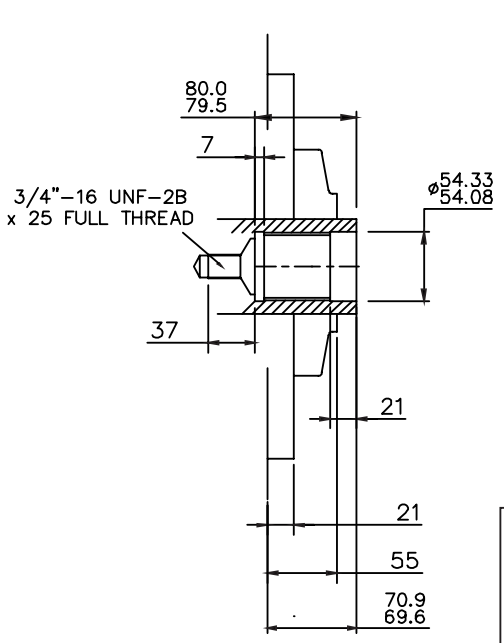

SPLINE DATA	
TO BS 3550	
FLAT ROOT SIDE FIT	
PRESSURE ANGLE	30°
NUMBER OF TEETH	24
PITCH	12/24
MAJOR DIAMETER	53.25/52.92
MINOR DIAMETER	48.81/48.68
FORM DIAMETER	52.49
PIN DIAMETER	3.66 flatted to 3.56
DIMENSION BETWEEN PINS	45.63/45.55

3-3 HMB060/080 (cont)

Installation

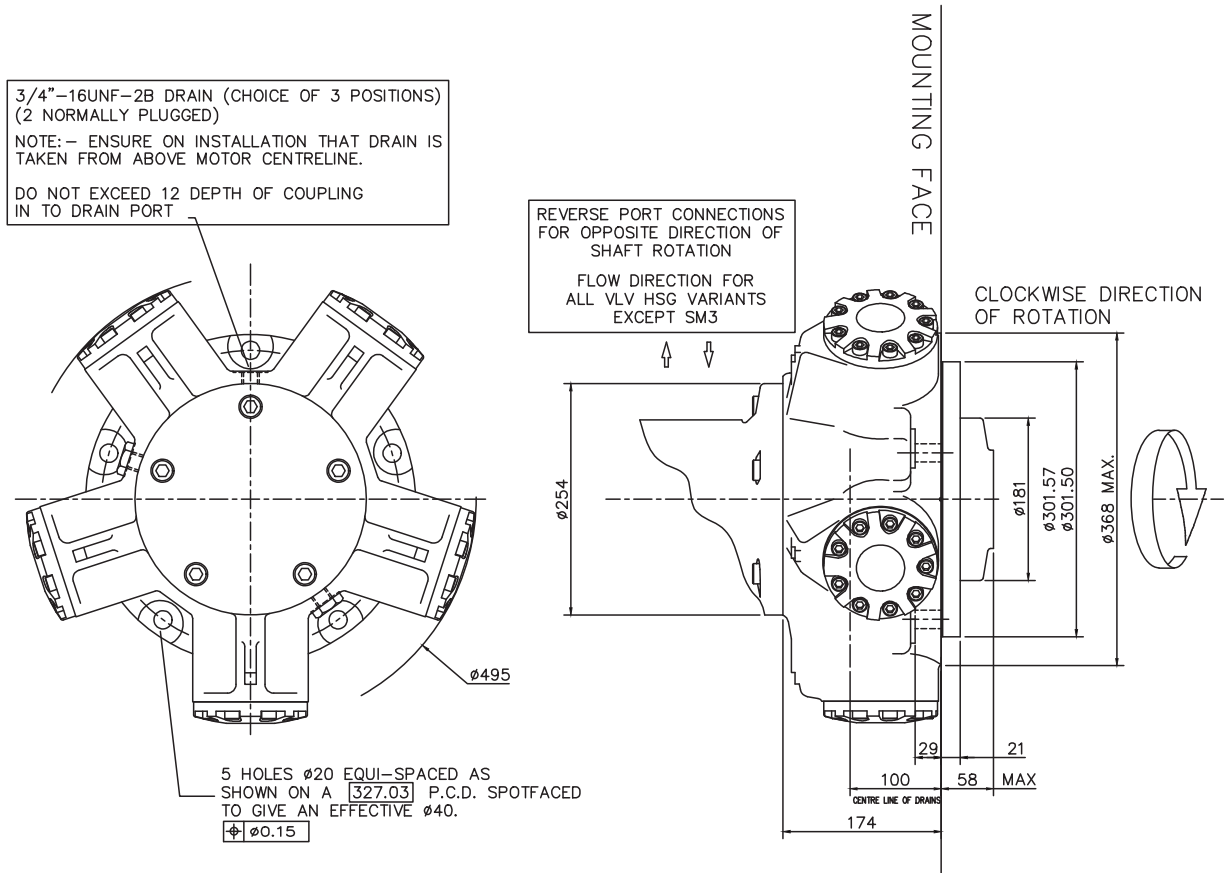

3-4 HMB100

'P', 'S' & 'Z' Shafts

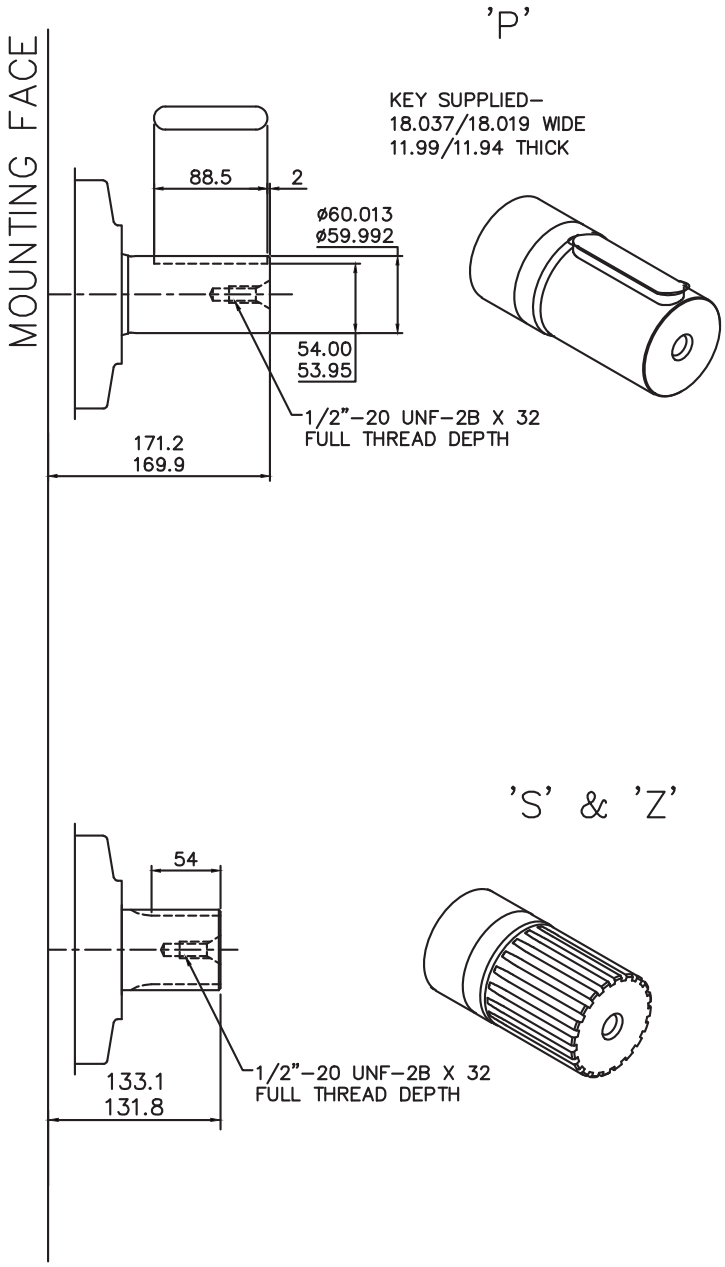

SPLINE DATA

'S'	
TO BS 3550 (ANSI B92.1 CLASS 5)	
FLAT ROOT SIDE FIT, CLASS 1	
PRESSURE ANGLE	30°
NUMBER OF TEETH	14
PITCH	6/12
MAJOR DIAMETER	62.553/62.425
FORM DIAMETER	55.052
MINOR DIAMETER	54.084/53.525
PIN DIAMETER	8.128
DIAMETER OVER PINS	71.593/71.544

'Z'
DIN 5480 W70 x 3 x 30 x 22 x 7h

3-4 HMB100 (cont)

'T' & 'Q' Shafts

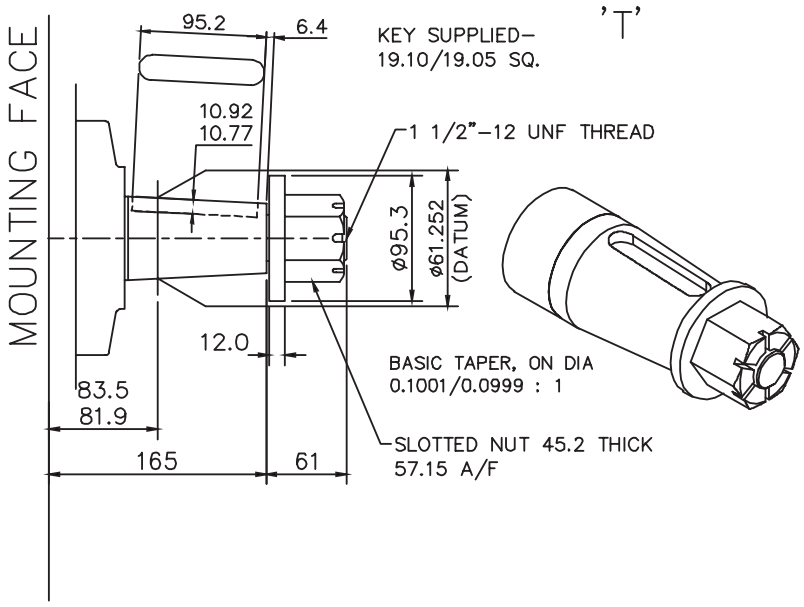

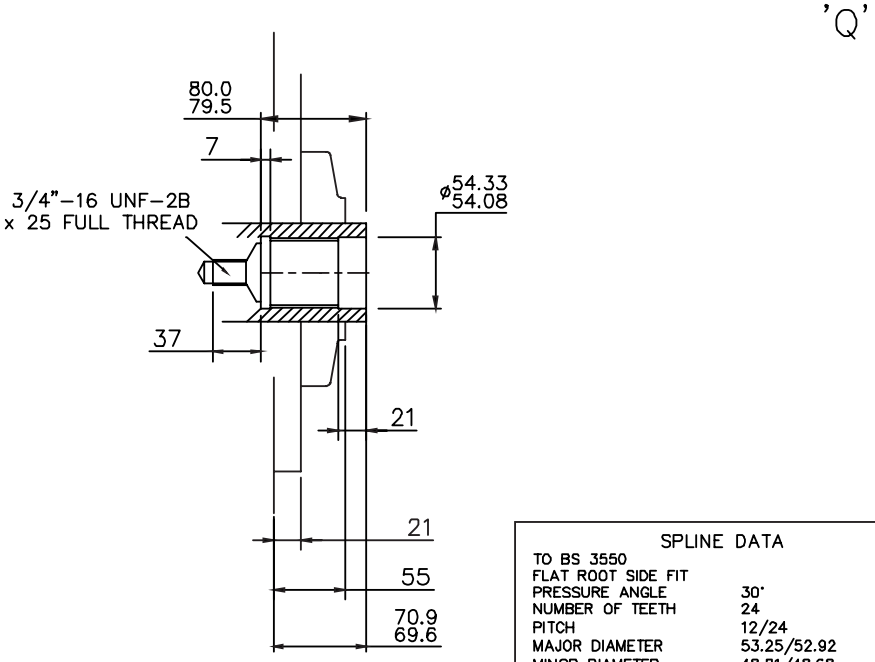

SPLINE DATA	
TO BS 3550	
FLAT ROOT SIDE FIT	
PRESSURE ANGLE	30°
NUMBER OF TEETH	24
PITCH	12/24
MAJOR DIAMETER	53.25/52.92
MINOR DIAMETER	48.81/48.68
FORM DIAMETER	52.49
PIN DIAMETER	3.66 flatted to 3.56
DIMENSION BETWEEN PINS	45.63/45.55

3-4 HMB100 (cont)

Installation

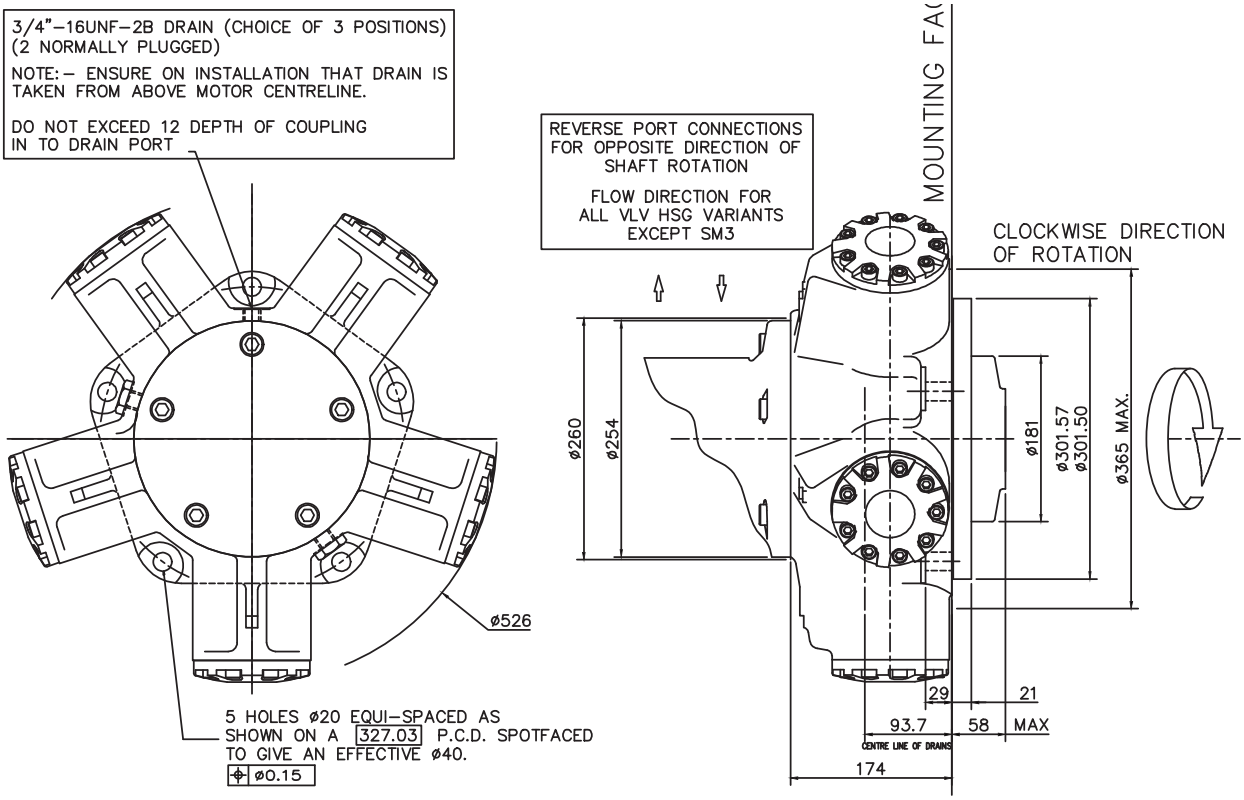

3-5 HM(HD)B125

HMB125 - 'P1', 'S3', 'S4' & 'Z3' Shafts

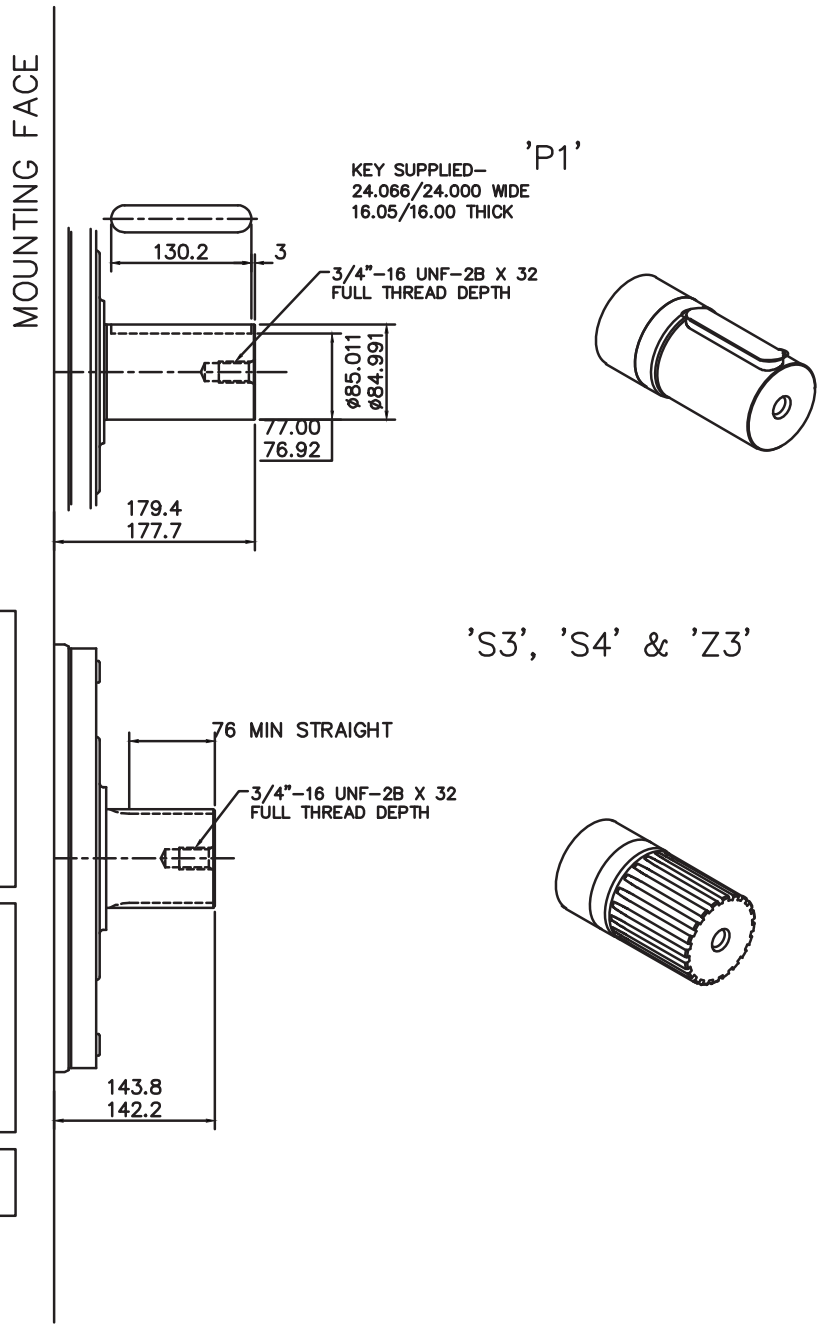

SPLINE DATA

'S3'	
TO BS 3550 (ANSI B92.1, CLASS 5)	
FLAT ROOT SIDE FIT, CLASS 1	
PRESSURE ANGLE	30°
NUMBER OF TEETH	20
PITCH	6/12
MAJOR DIAMETER	87.953/87.825
FORM DIAMETER	80.264
MINOR DIAMETER	79.485/78.925
PIN DIAMETER	8.128
DIAMETER OVER PINS	97.084/97.030

'S4'	
PRESSURE ANGLE	20°
NUMBER OF TEETH	16
PITCH	5/10
MAJOR DIAMETER	86.360/86.233
FORM DIAMETER	76.124
MINOR DIAMETER	74.93/72.39
PIN DIAMETER	8.636
DIAMETER OVER PINS	92.710/92.581

'Z3'
DIN 5480 W85 x 3 x 27 x 7h

3-5 HM(HD)B125 (cont)

HMB125 - 'T' & 'Q' Shafts

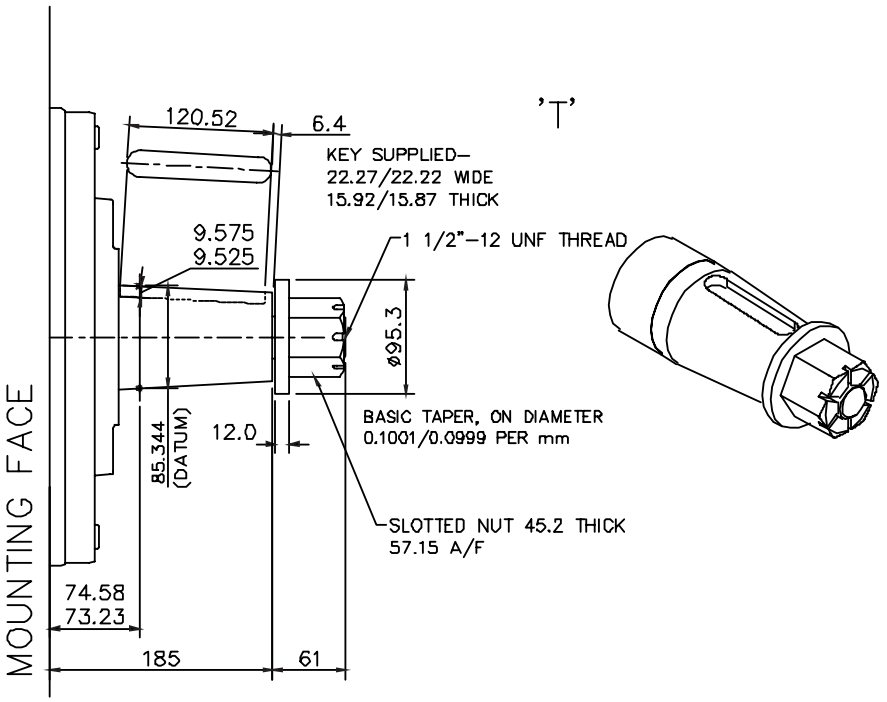

SPLINE DATA	
BS3550 : FLAT ROOT SIDE FIT	
NUMBER OF TEETH	34
PITCH	12/24
MAJOR DIAMETER	74.41/74.08
MINOR DIAMETER	69.98/69.85
PIN DIAMETER	3.66 flatted to 3.56
DIMENSION BETWEEN PINS	66.81/66.74

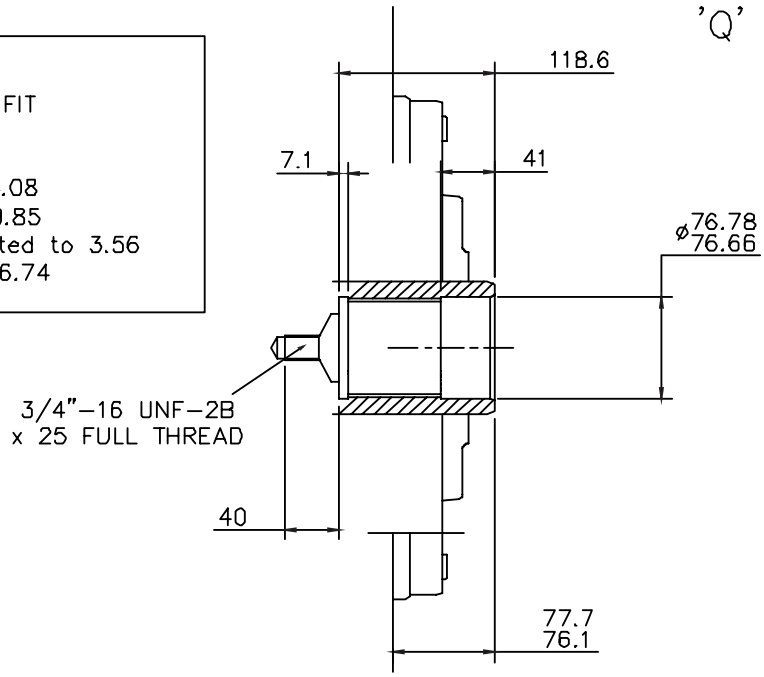

3-5 HM(HD)B125 (cont)

HMHDB125 - 'P2' Shafts

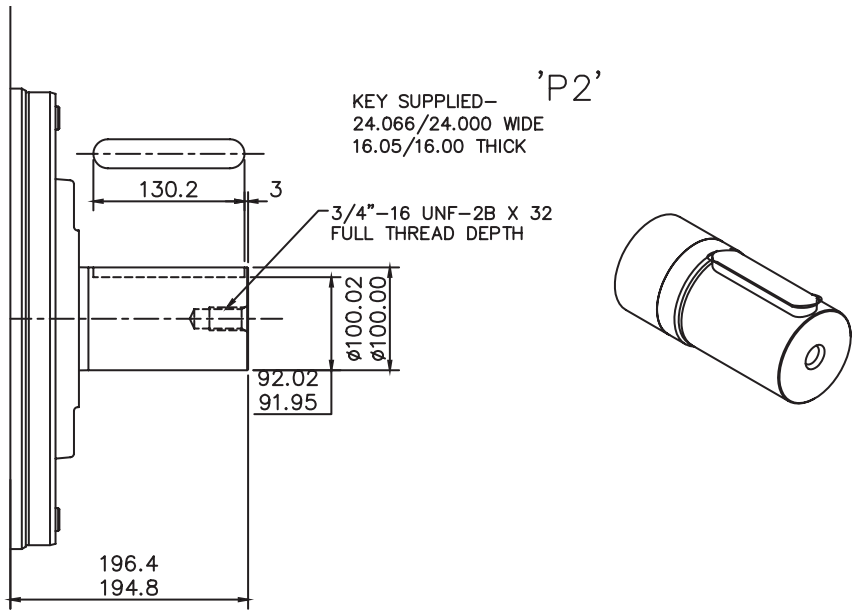

3-5 HM(HD)B125 (cont)

HMHDB125 - 'S5' & 'Z5' Shafts

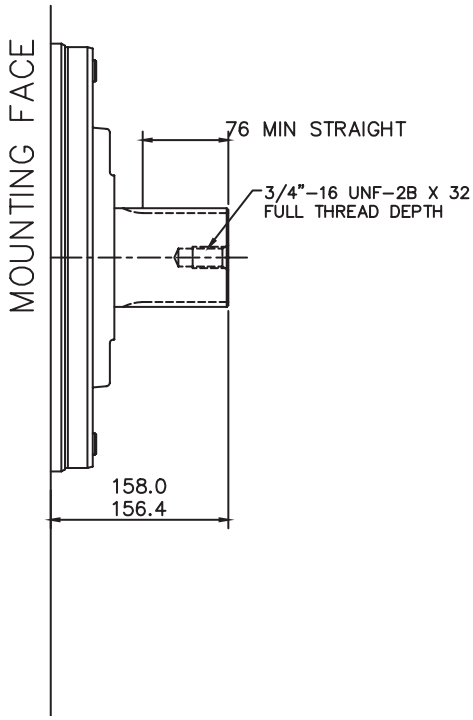

'S5' & 'Z5'

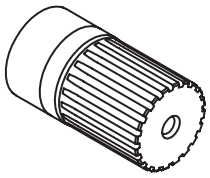

SPLINE DATA

'S5'	
PRESSURE ANGLE	20°
NUMBER OF TEETH	23
PITCH	6/12
MAJOR DIAMETER	100.652/100.526
FORM DIAMETER	92.939
MINOR DIAMETER	92.184/91.626
PIN DIAMETER	8.128
DIAMETER OVER PINS	109.573/109.517

'Z5'
DIN 5480 W100 x 4 x 24 x 7h

3-5 HM(HD)B125 (cont)

Installation

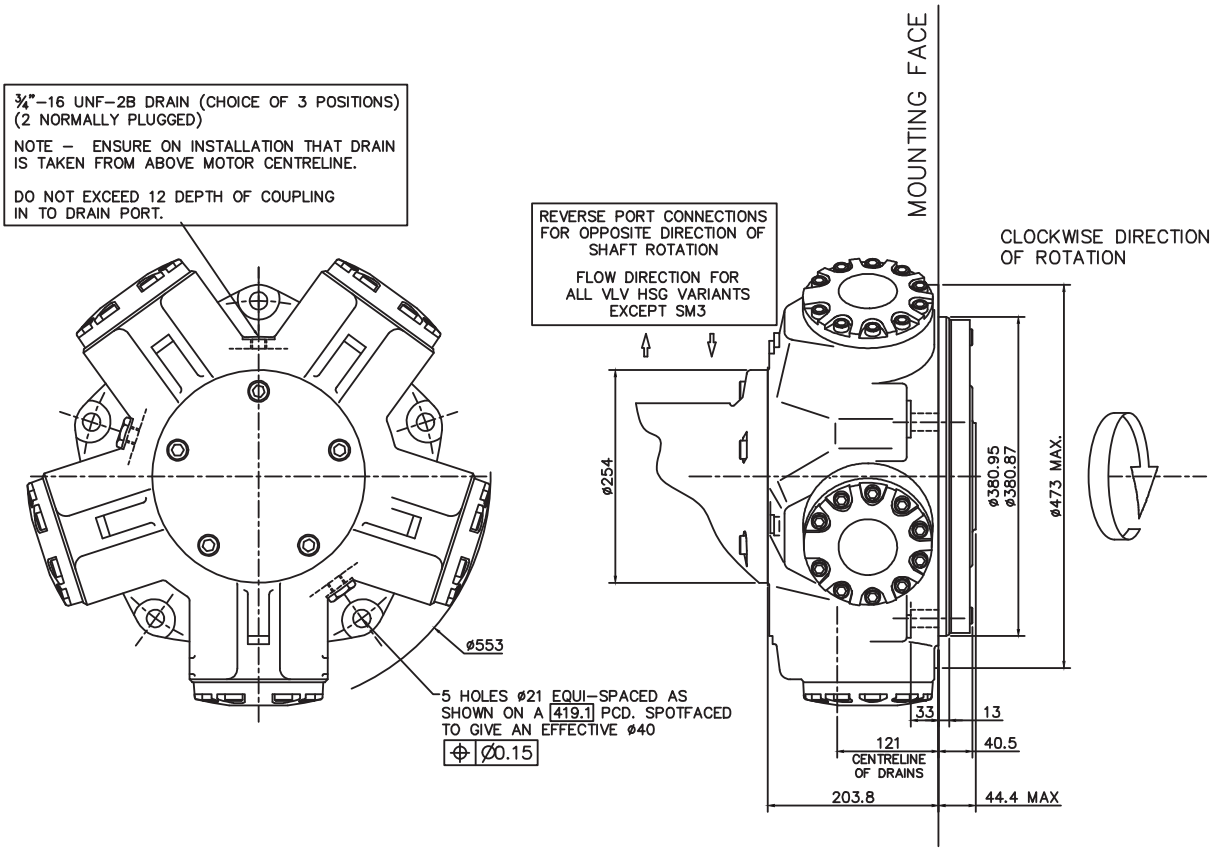

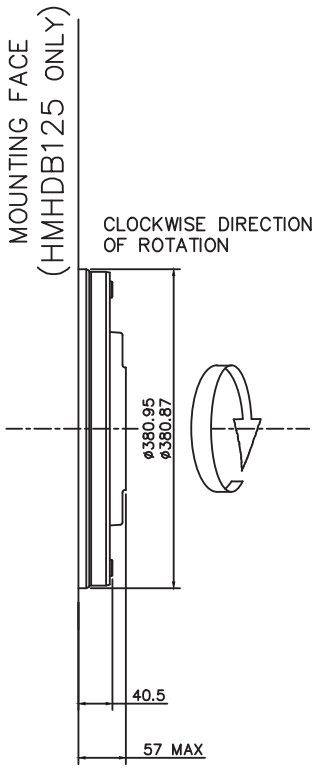

3-6 HM(HD)B150/200

HMB150/200 - 'P1', 'S3', 'S4' & 'Z3' Shafts

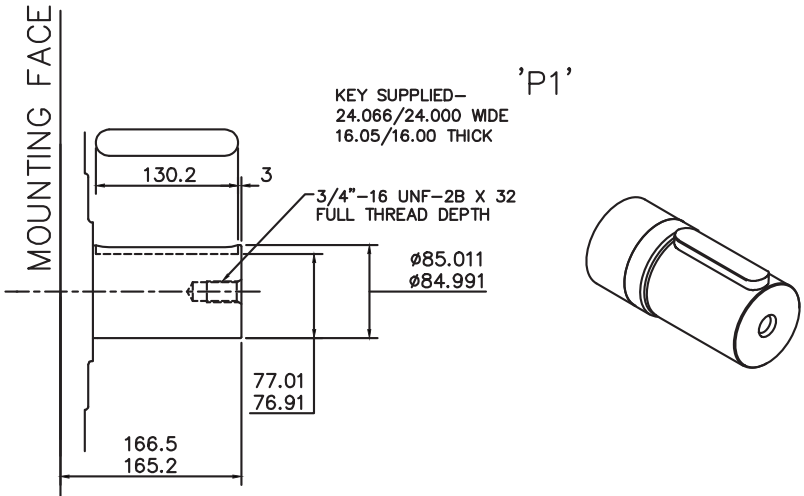

SPLINE DATA

'S3'	
TO BS 3550 (ANSI B92.1, CLASS 5)	
FLAT ROOT SIDE FIT, CLASS 1	
PRESSURE ANGLE	30°
NUMBER OF TEETH	20
PITCH	6/12
MAJOR DIAMETER	87.953/87.825
FORM DIAMETER	80.264
MINOR DIAMETER	79.485/78.925
PIN DIAMETER	8.128
DIAMETER OVER PINS	97.084/97.030

'S4'	
PRESSURE ANGLE	20°
NUMBER OF TEETH	16
PITCH	5/10
MAJOR DIAMETER	86.360/86.233
FORM DIAMETER	76.124
MINOR DIAMETER	74.93/72.39
PIN DIAMETER	8.636
DIAMETER OVER PINS	92.710/92.581

'Z3'
DIN 5480 W85 x 3 x 27 x 7h

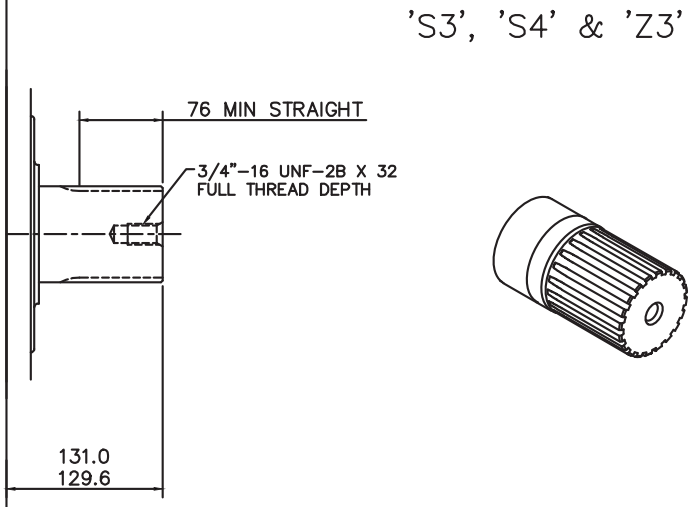

3-6 HM(HD)B150/200 (cont)

HMB150/200 - 'T' Shaft

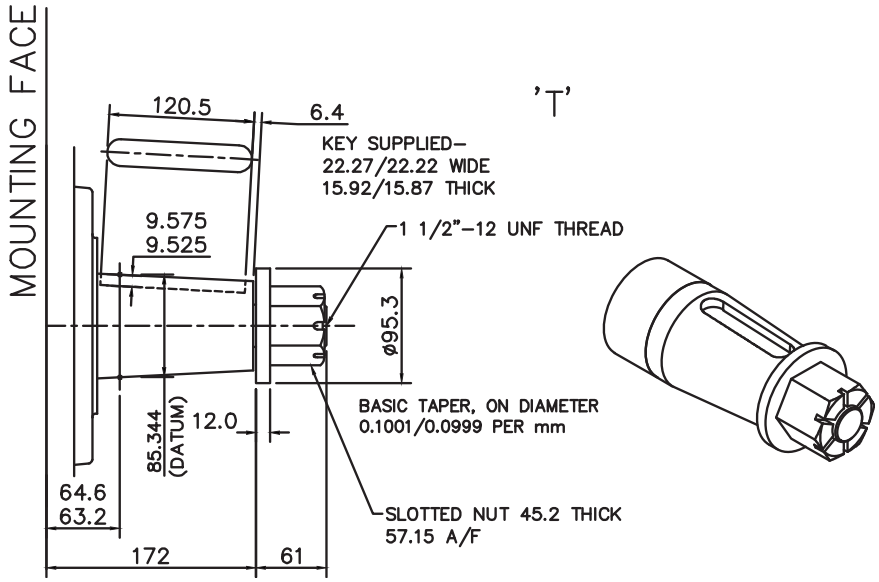

3-6 HM(HD)B150/200 (cont)

HMHDB150/200 - 'P2', 'S5' & 'Z5' Shafts

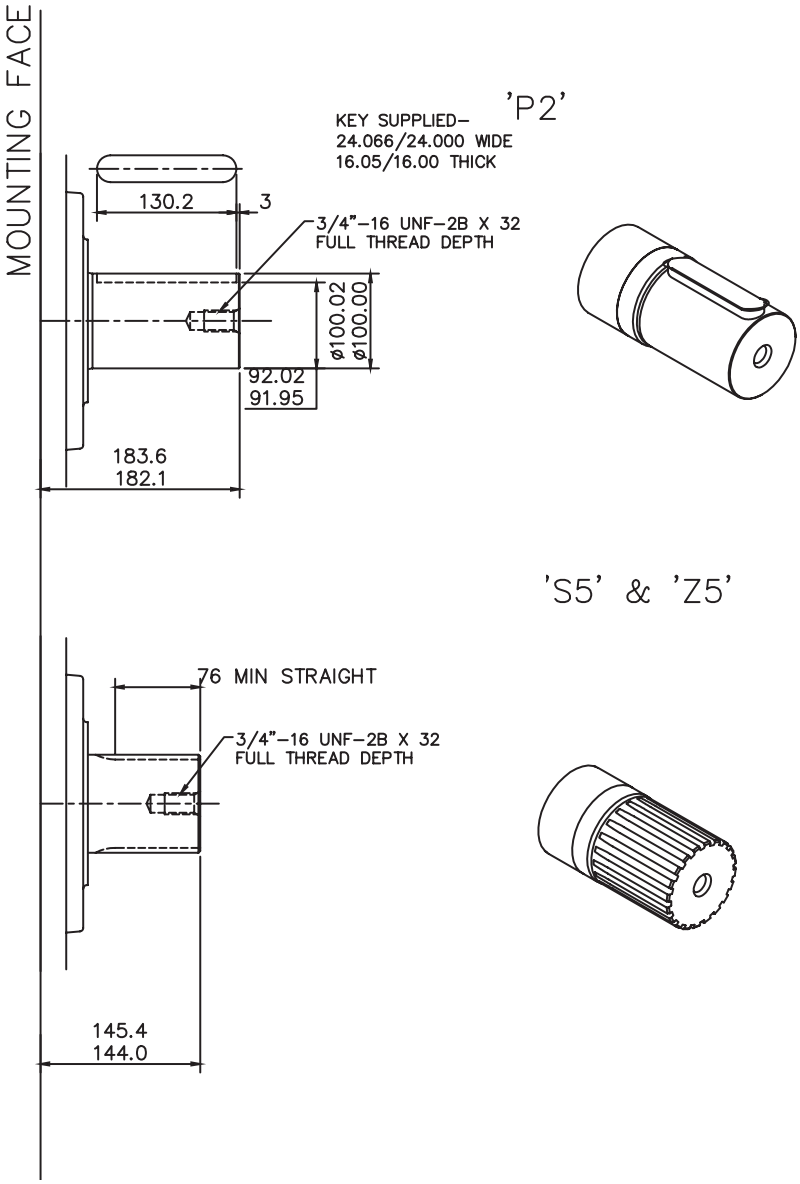

SPLINE DATA

'S5'	
PRESSURE ANGLE	30°
NUMBER OF TEETH	23
PITCH	6/12
MAJOR DIAMETER	100.652/100.526
FORM DIAMETER	92.939
MINOR DIAMETER	92.184/91.626
PIN DIAMETER	8.128
DIAMETER OVER PINS	109.573/109.517

'Z5'
DIN 5480 W100 x 4 x 24 x 7h

3-6 HM(HD)B150/200 (cont)

HMHDB150/200 - 'Q' Shafts

SPLINE DATA
BS3550 : FLAT ROOT SIDE FIT

NUMBER OF TEETH	34
PITCH	12/24
MAJOR DIAMETER	74.41/74.08
MINOR DIAMETER	69.98/69.85
PIN DIAMETER	3.66 flatted to 3.56
DIMENSION BETWEEN PINS	66.81/66.74

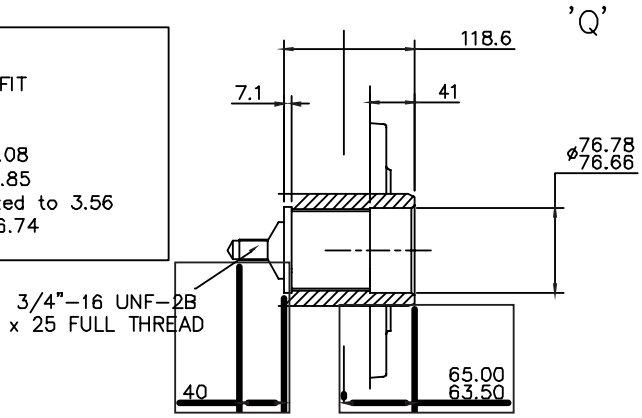

3-6 HM(HD)B150/200 (cont)

Installation

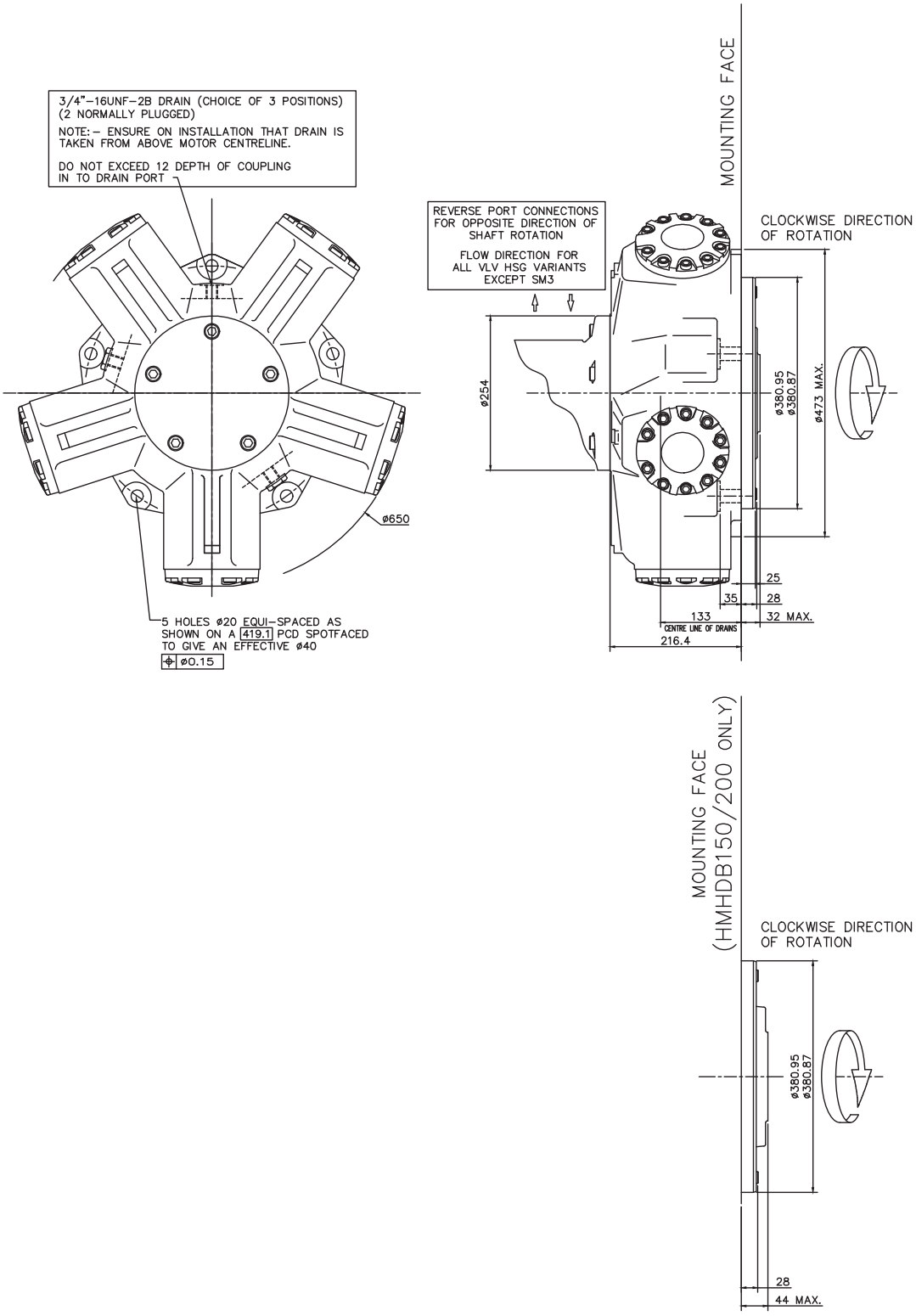

3-7 HM(HD)B270

HMB270 - 'P1', 'S3' & 'Z' Shafts

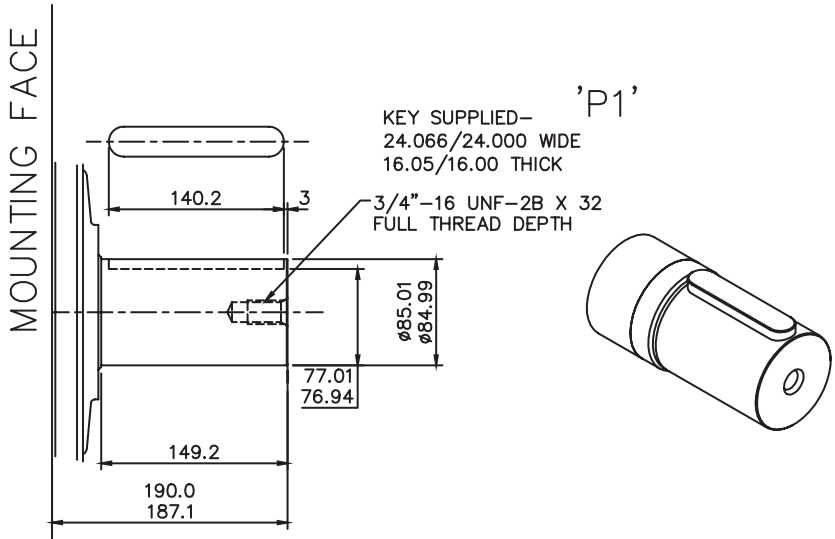

SPLINE DATA

'S3'	
TO BS 3550 (ANSI B92.1, CLASS 5)	
FLAT ROOT SIDE FIT, CLASS 1	
PRESSURE ANGLE	30°
NUMBER OF TEETH	20
PITCH	6/12
MAJOR DIAMETER	87.953/87.825
FORM DIAMETER	80.264
MINOR DIAMETER	79.485/78.925
PIN DIAMETER	8.128
DIAMETER OVER PINS	97.084/97.030

'Z'
DIN 5480 W100 x 4 x 24 x 7h

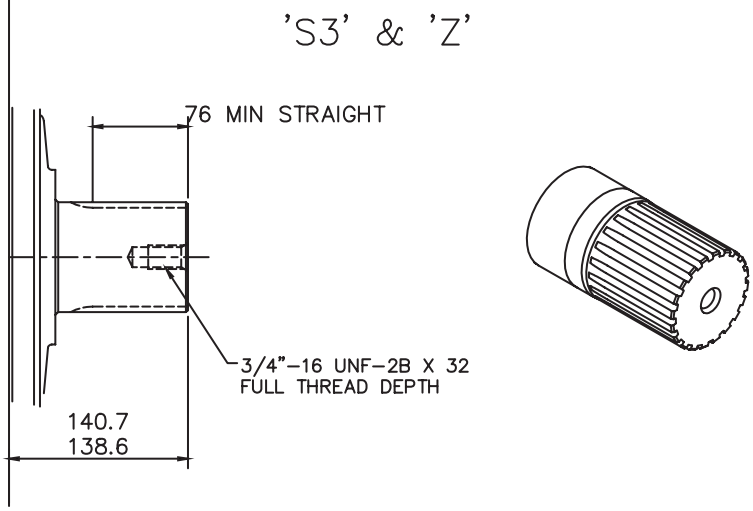

3-7 HM(HD)B270 (cont)

HMB270 - 'T' & 'Q' Shaft

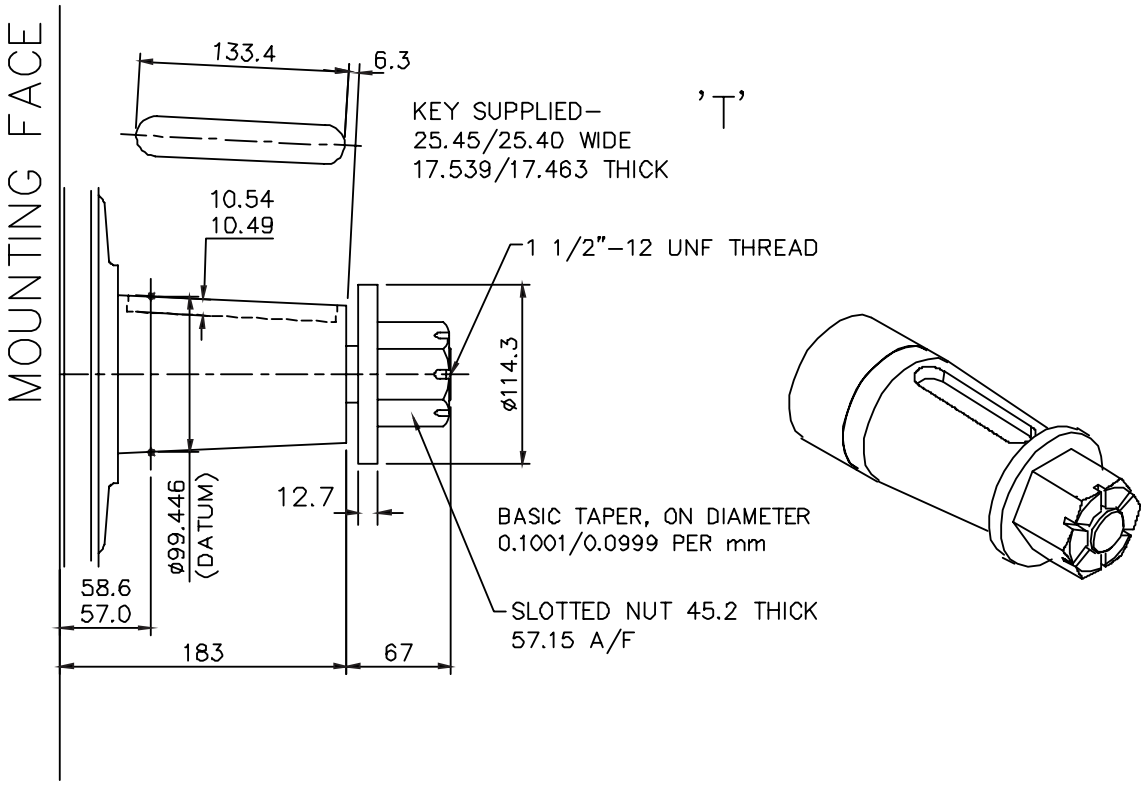

SPLINE DATA	
BS3550 : FLAT ROOT SIDE FIT	
NUMBER OF TEETH	34
PITCH	12/24
MAJOR DIAMETER	74.41/74.08
MINOR DIAMETER	69.98/69.85
PIN DIAMETER	3.66 flatted to 3.56
DIMENSION BETWEEN PINS	66.81/66.74

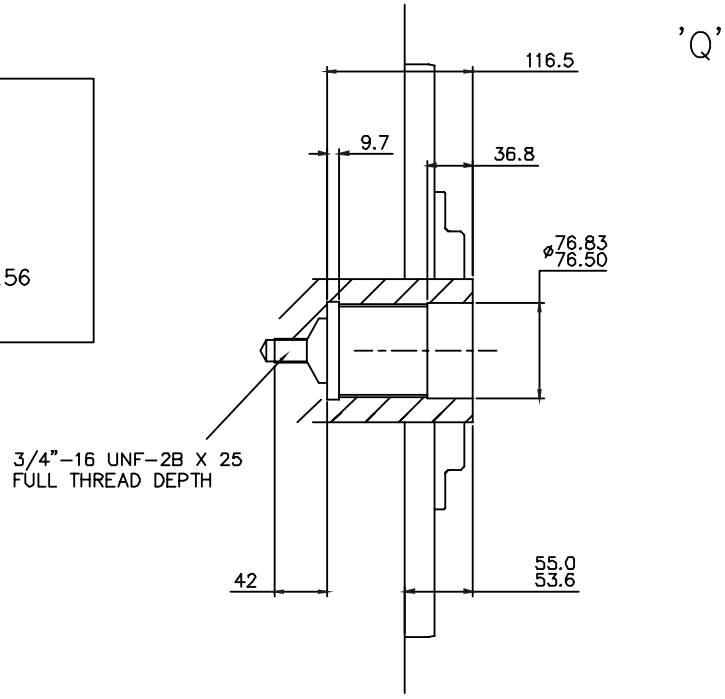

3-7 HM(HD)B270 (cont)

HMHDB270 - 'P2' & 'S5' Shafts

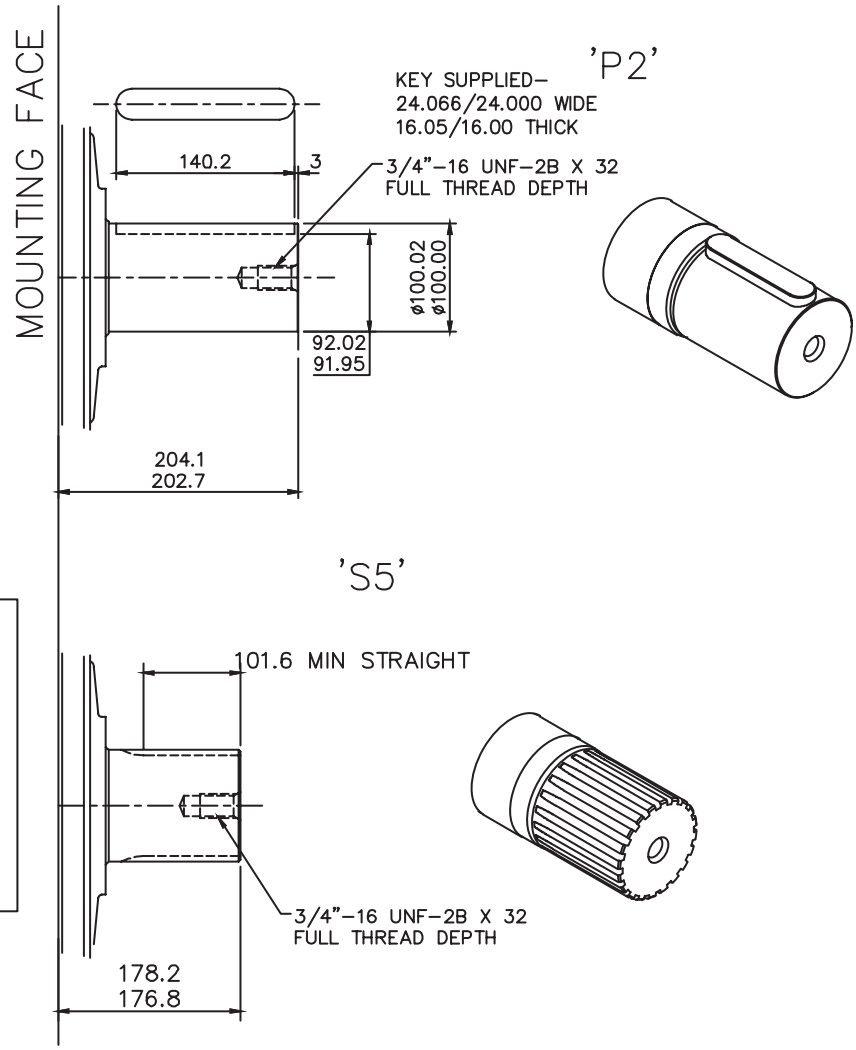

SPLINE DATA

'S3'	
TO BS 3550 (ANSI B92.1, CLASS 5)	
FLAT ROOT SIDE FIT, CLASS 1	
PRESSURE ANGLE	30°
NUMBER OF TEETH	23
PITCH	6/12
MAJOR DIAMETER	100.653/100.526
FORM DIAMETER	92.939
MINOR DIAMETER	92.184/91.625
PIN DIAMETER	8.128
DIAMETER OVER PINS	109.573/109.517

3-7 HM(HD)B270 (cont)

HMHDB270 - 'Z' Shaft

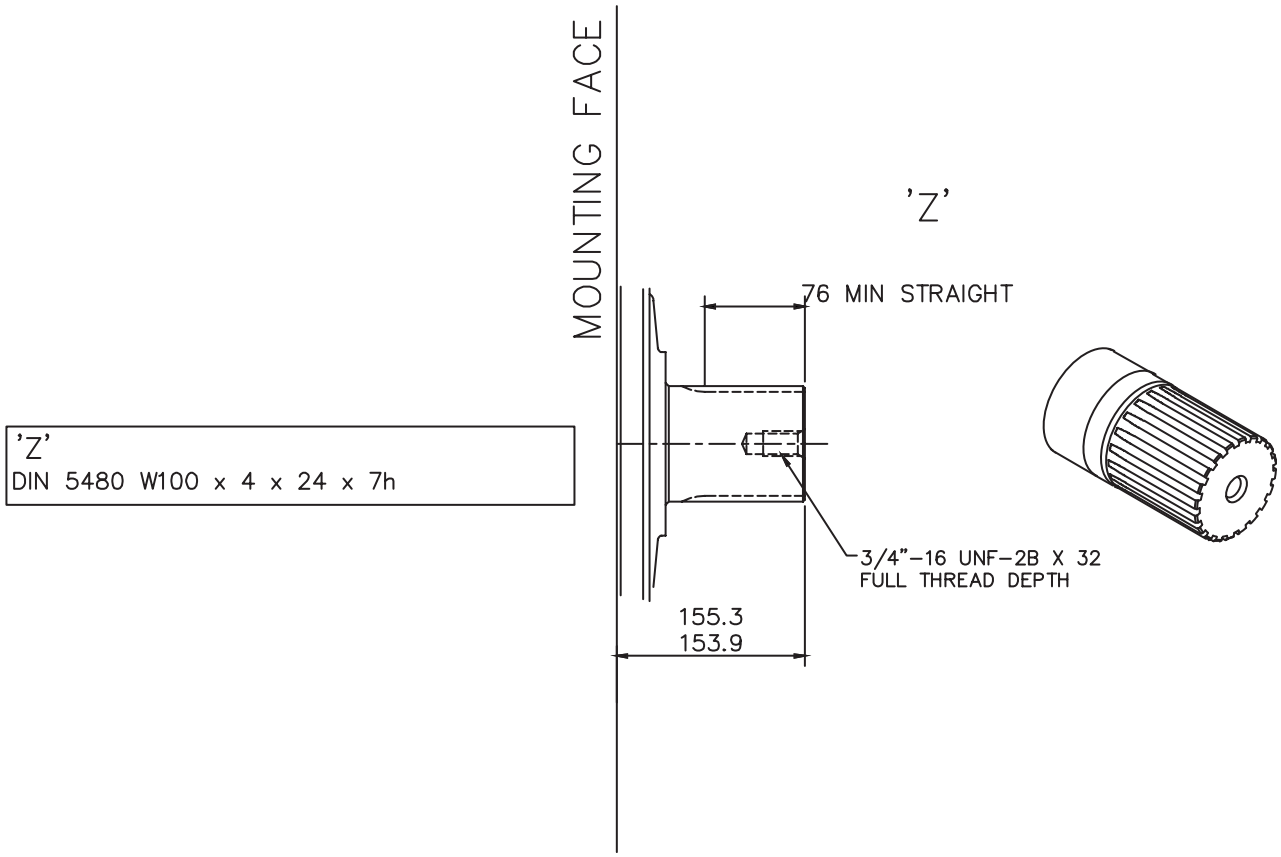

3-7 HM(HD)B270 (cont)

Installation

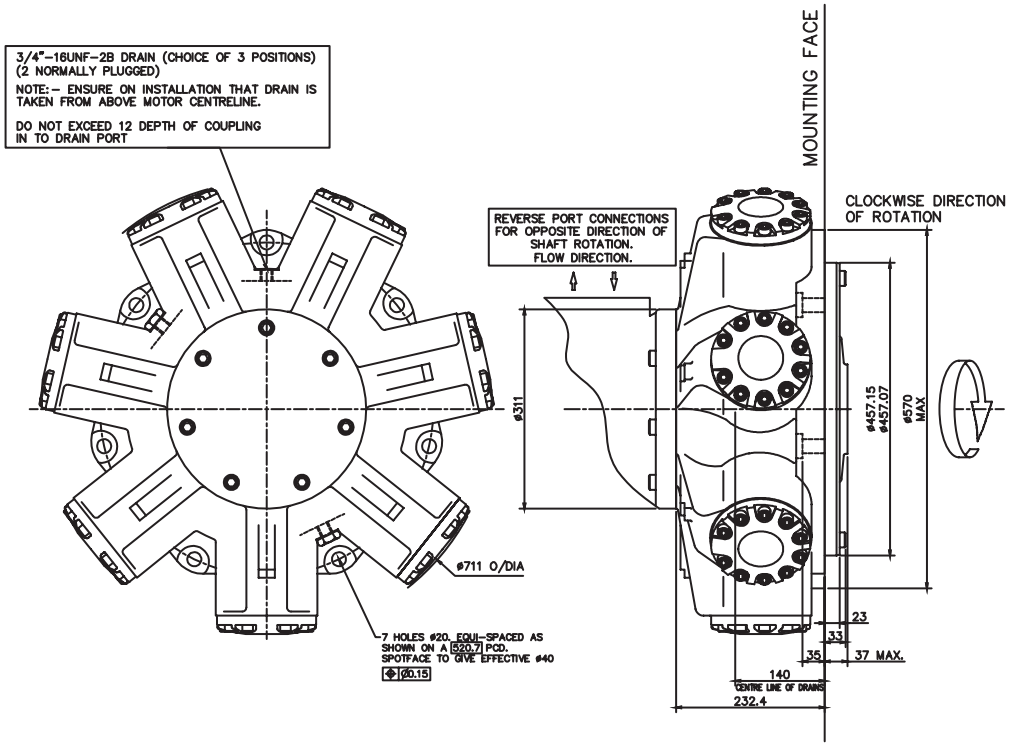

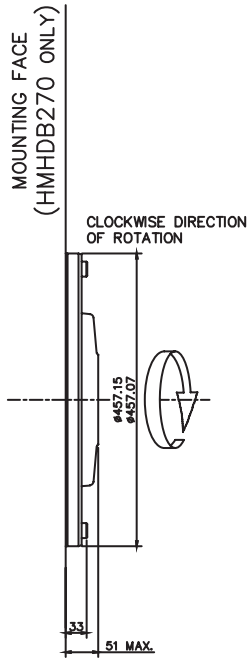

3-8 HM(HD)B325

HMB325 - 'P1', 'S3' & 'Z' Shafts

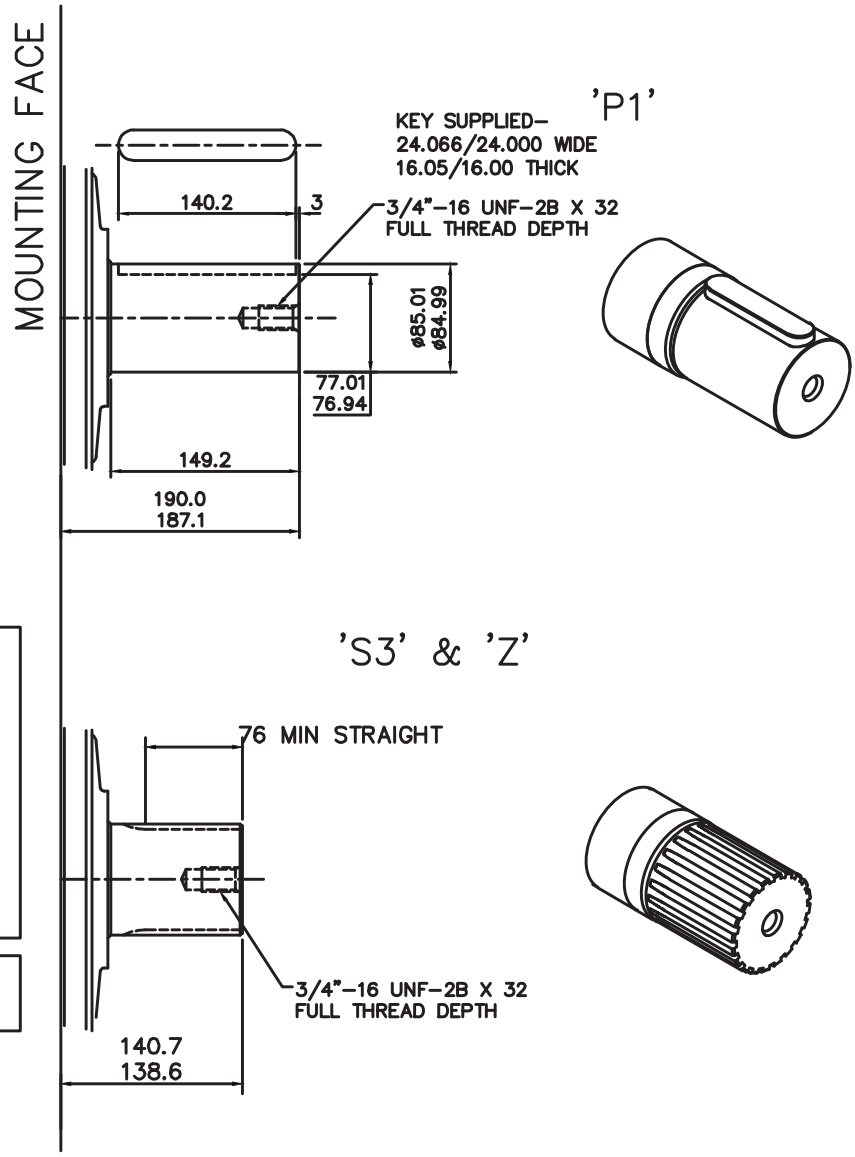

SPLINE DATA

'S3'	
TO BS 3550 (ANSI B92.1, CLASS 5)	
FLAT ROOT SIDE FIT, CLASS 1	
PRESSURE ANGLE	30°
NUMBER OF TEETH	20
PITCH	6/12
MAJOR DIAMETER	87.953/87.825
FORM DIAMETER	80.264
MINOR DIAMETER	79.485/78.925
PIN DIAMETER	8.128
DIAMETER OVER PINS	97.084/97.030

'Z'
DIN 5480 W100 x 4 x 24 x 7h

3-8 HM(HD)B325 (cont)

HMB325 - 'T' & 'Q' Shaft

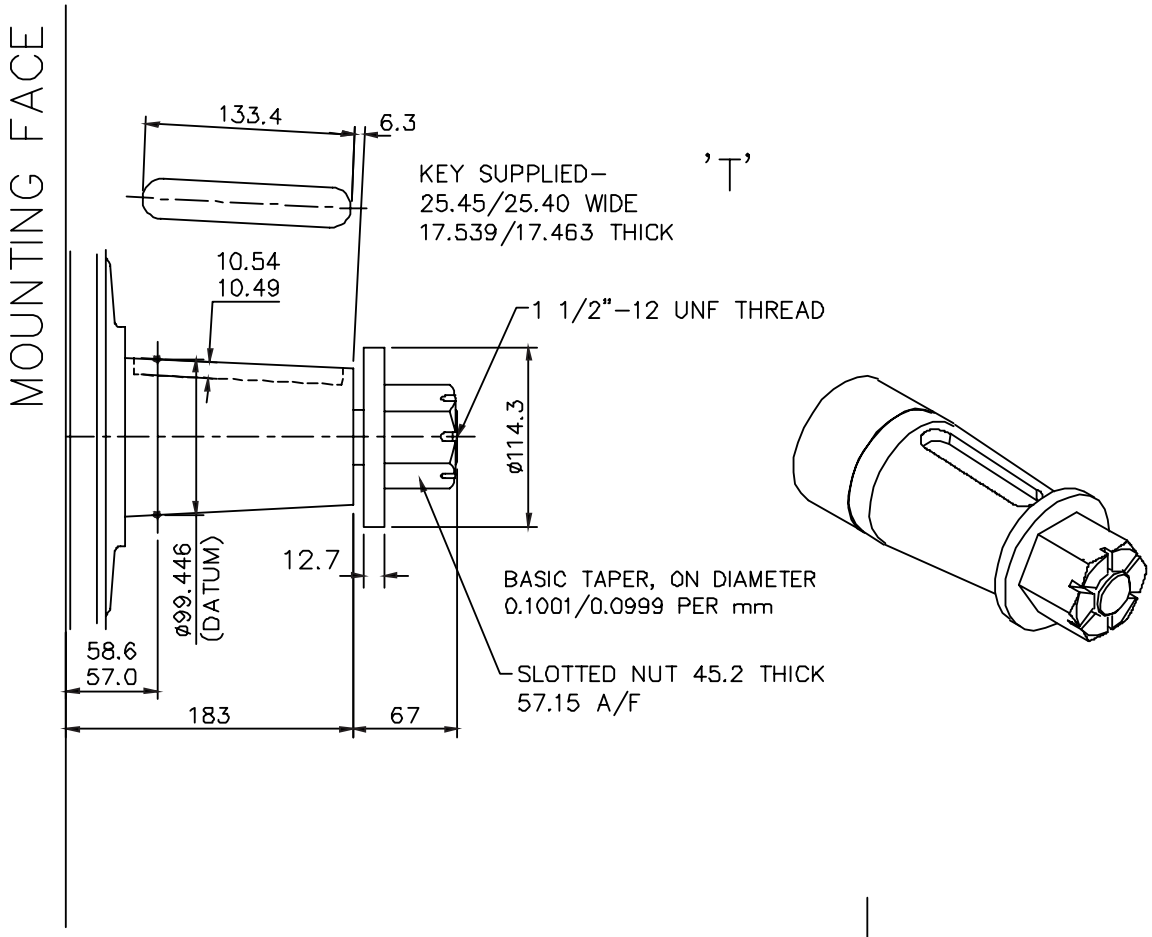

SPLINE DATA	
BS3550 : FLAT ROOT SIDE FIT	
NUMBER OF TEETH	34
PITCH	12/24
MAJOR DIAMETER	74.41/74.08
MINOR DIAMETER	69.98/69.85
PIN DIAMETER	3.66 flatted to 3.56
DIMENSION BETWEEN PINS	66.81/66.74

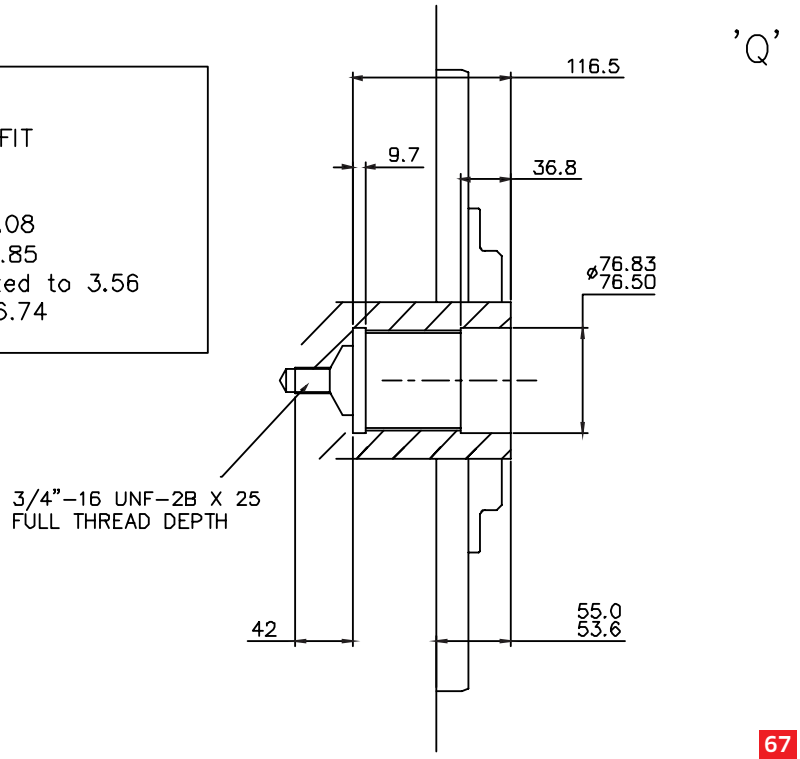

3-8 HM(HD)B325 (cont)

HMHDB325 - 'P2' & 'S5' Shafts

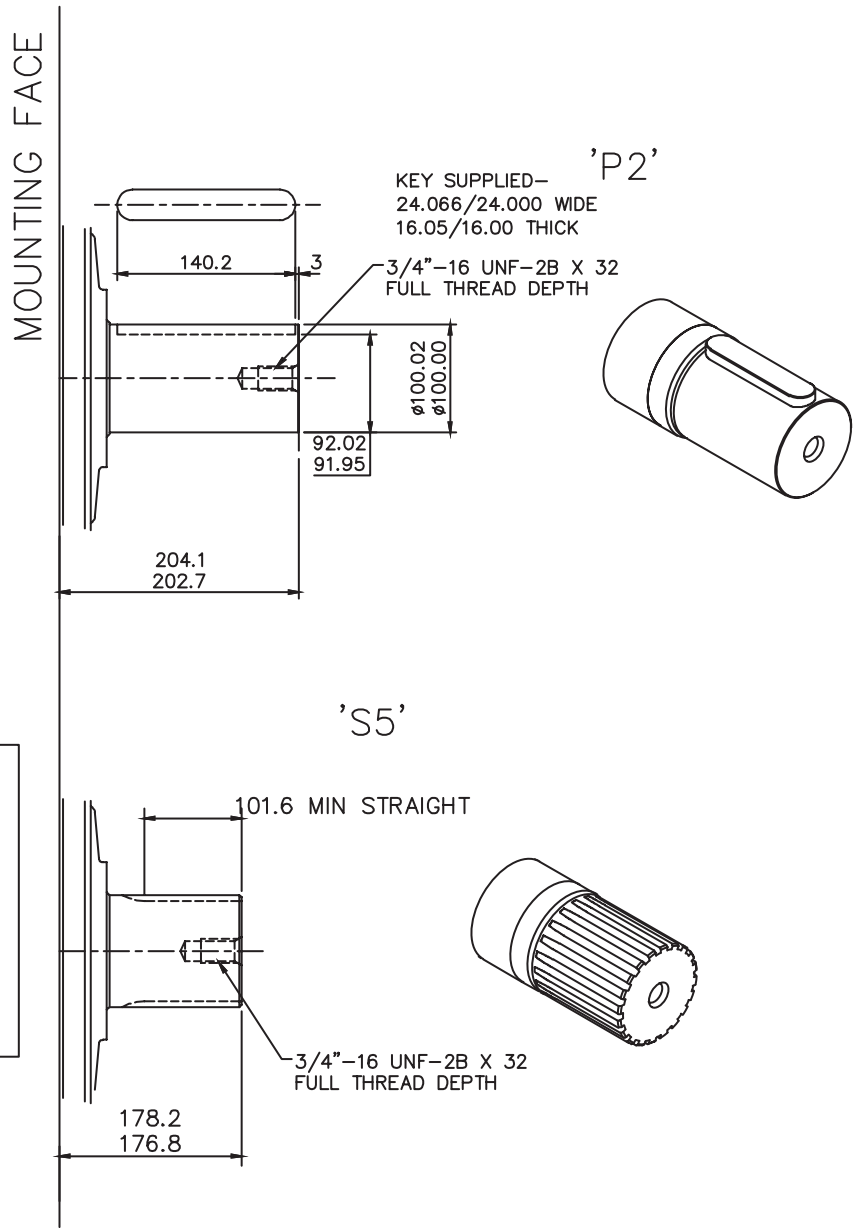

SPLINE DATA

'S3'	
TO BS 3550 (ANSI B92.1, CLASS 5)	
FLAT ROOT SIDE FIT, CLASS 1	
PRESSURE ANGLE	30°
NUMBER OF TEETH	23
PITCH	6/12
MAJOR DIAMETER	100.653/100.526
FORM DIAMETER	92.939
MINOR DIAMETER	92.184/91.625
PIN DIAMETER	8.128
DIAMETER OVER PINS	109.573/109.517

3-8 HM(HD)B325 (cont)

HMHDB325 - 'Z' Shaft

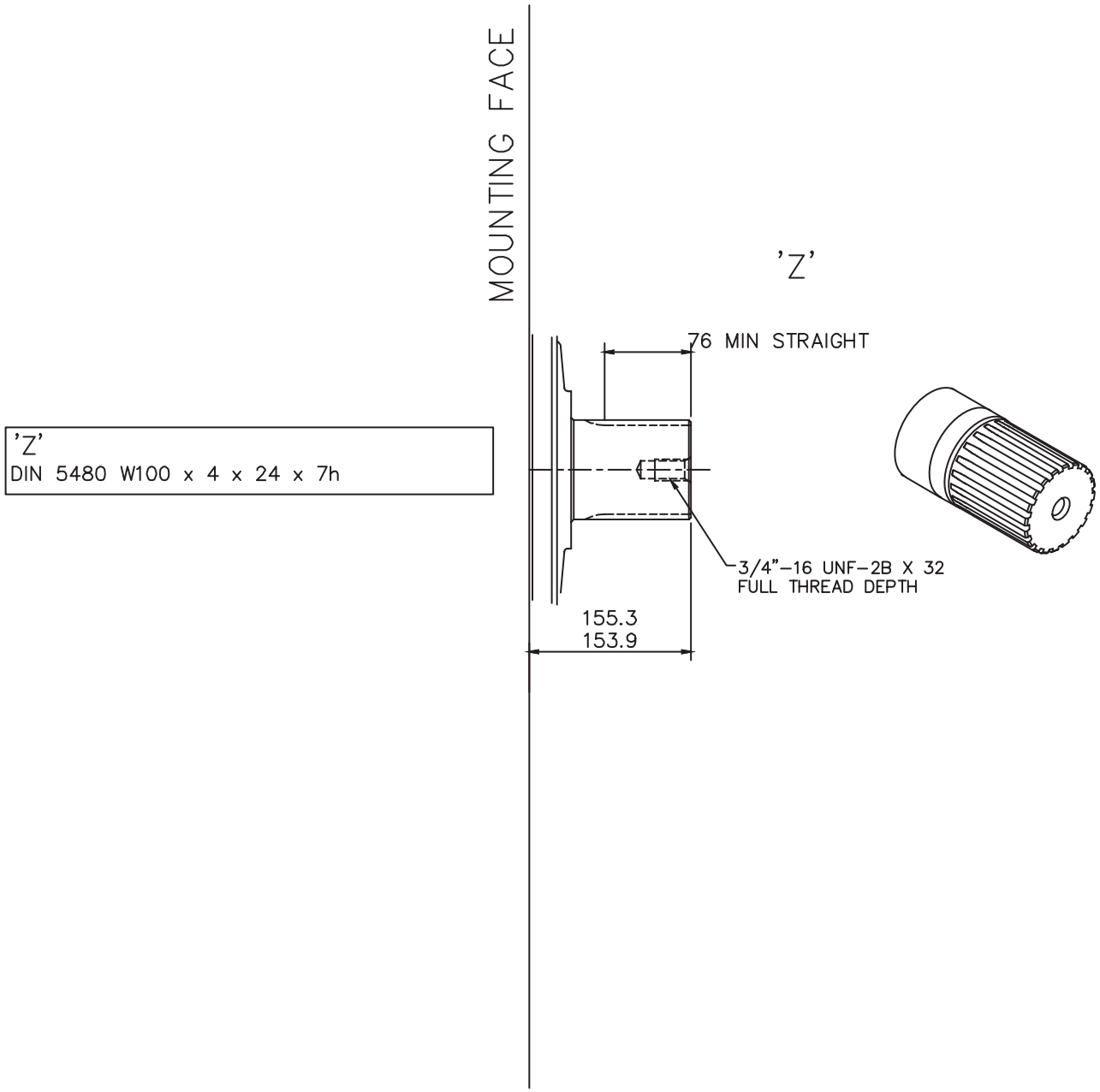

3-8 HM(HD)B325 (cont)

Installation

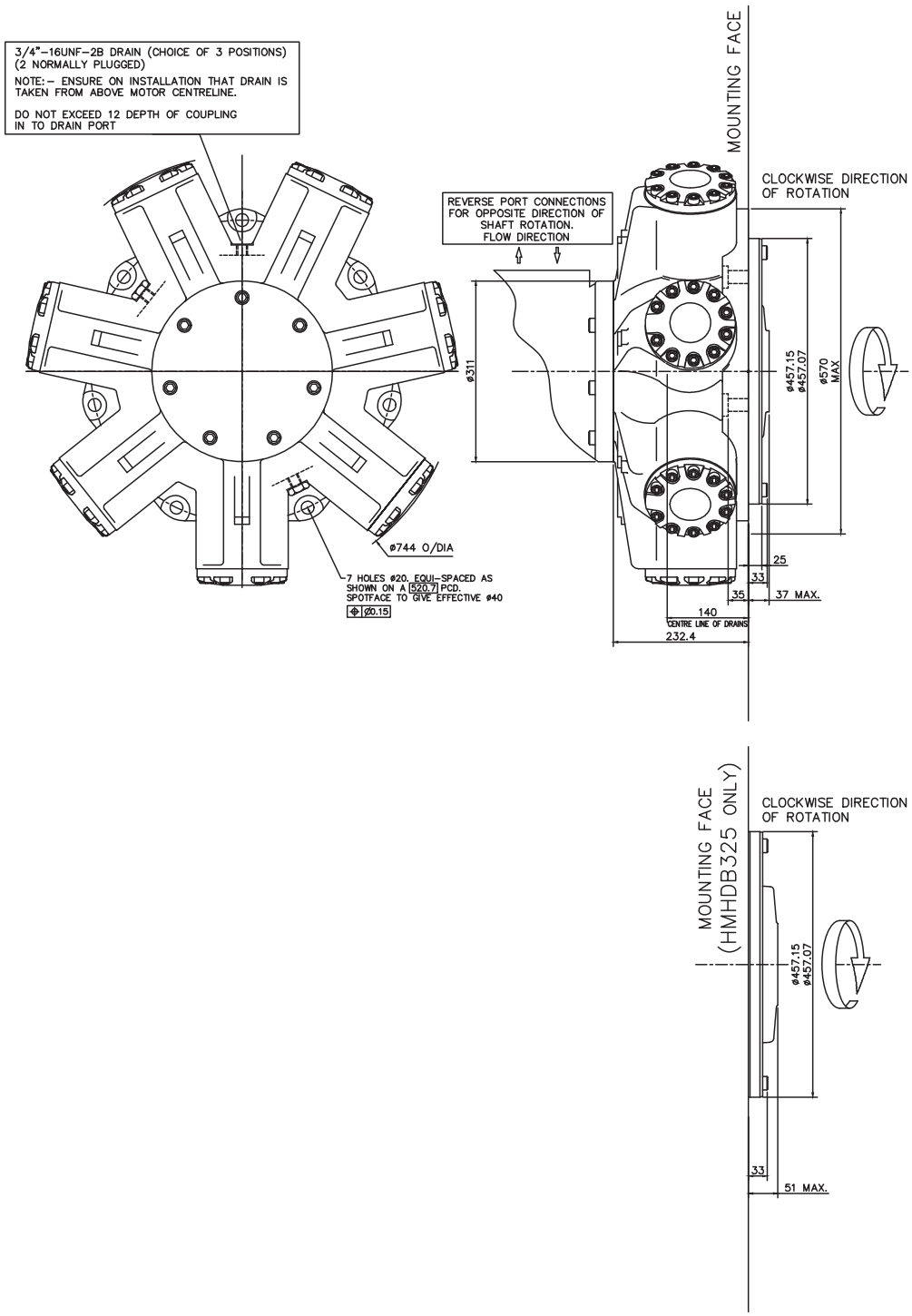

3-9 HMHDB400

'P', 'S' & 'Z' Shafts

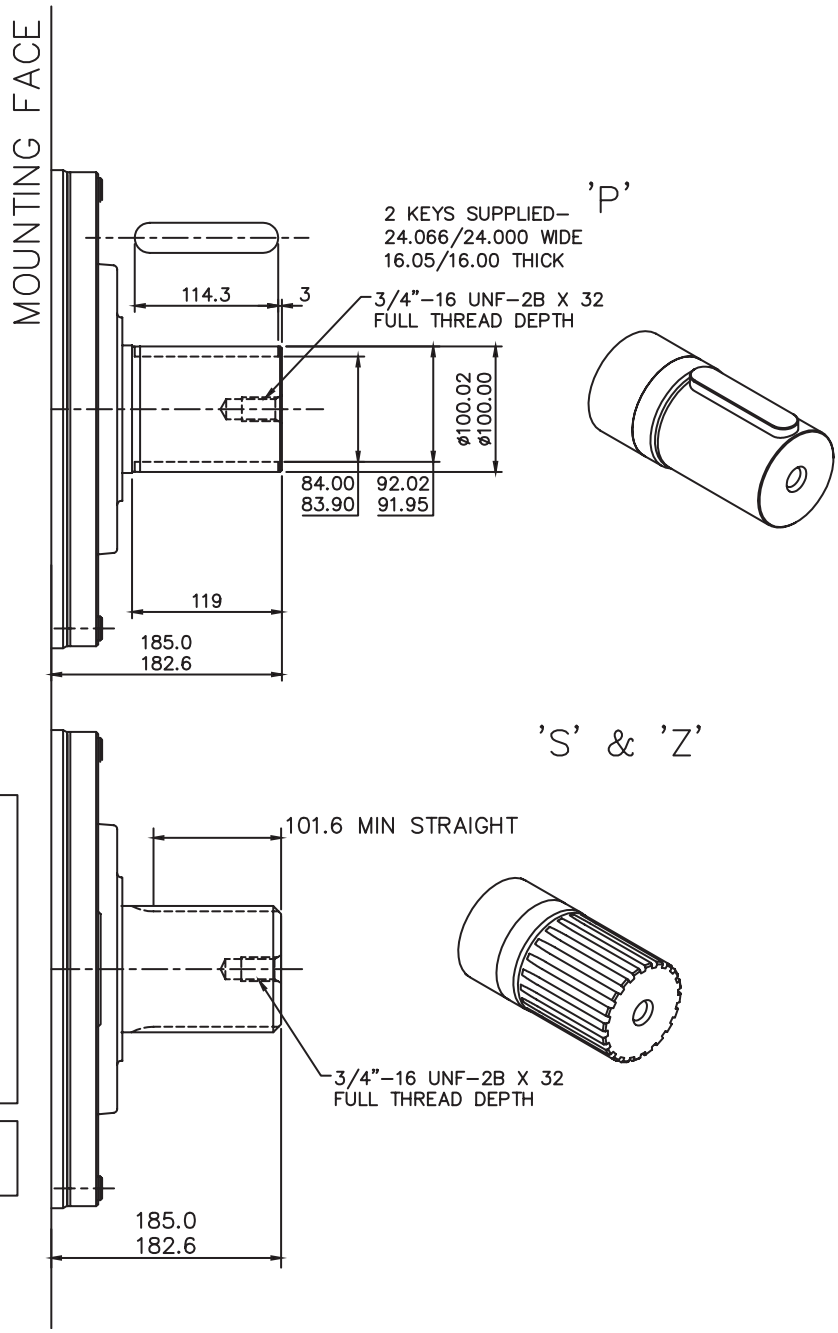

SPLINE DATA

'S'	
TO BS 3550 (ANSI B92.1, CLASS 5)	
FLAT ROOT SIDE FIT, CLASS 1	
PRESSURE ANGLE	30°
NUMBER OF TEETH	23
PITCH	6/12
MAJOR DIAMETER	100.653/100.526
FORM DIAMETER	92.939
MINOR DIAMETER	92.184/91.625
PIN DIAMETER	8.128
DIAMETER OVER PINS	109.573/109.517

'Z'
DIN 5480 W100 x 4 x 24 x 7h

3-9 HMHDB400 (cont)

Installation

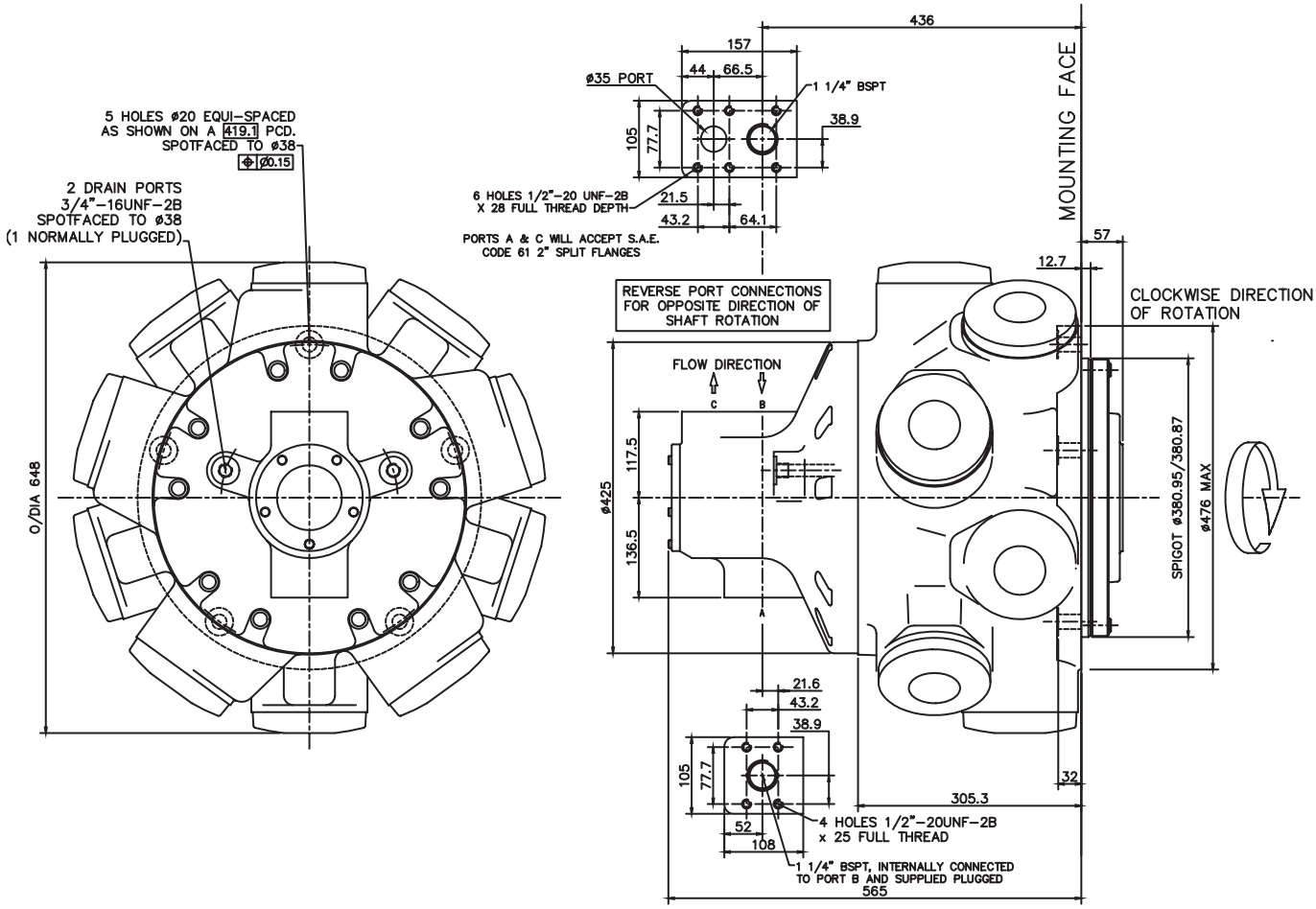

3-10 HMB500

'P', 'S' & 'Z' Shafts

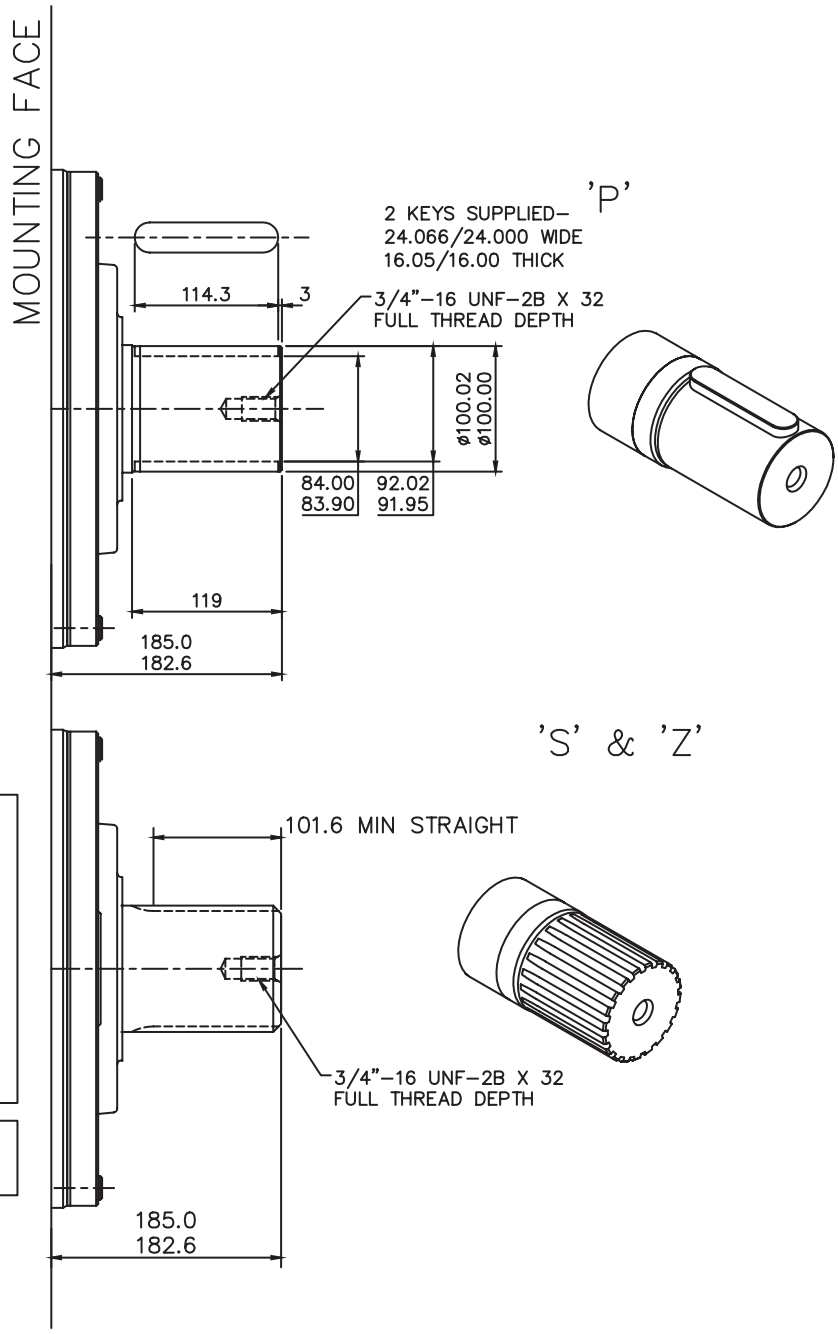

SPLINE DATA

'S'	
TO BS 3550 (ANSI B92.1, CLASS 5)	
FLAT ROOT SIDE FIT, CLASS 1	
PRESSURE ANGLE	30°
NUMBER OF TEETH	23
PITCH	6/12
MAJOR DIAMETER	100.653/100.526
FORM DIAMETER	92.939
MINOR DIAMETER	92.184/91.625
PIN DIAMETER	8.128
DIAMETER OVER PINS	109.573/109.517

'Z'
DIN 5480 W100 x 4 x 24 x 7h

3-10 HMB500 (cont)

Installation

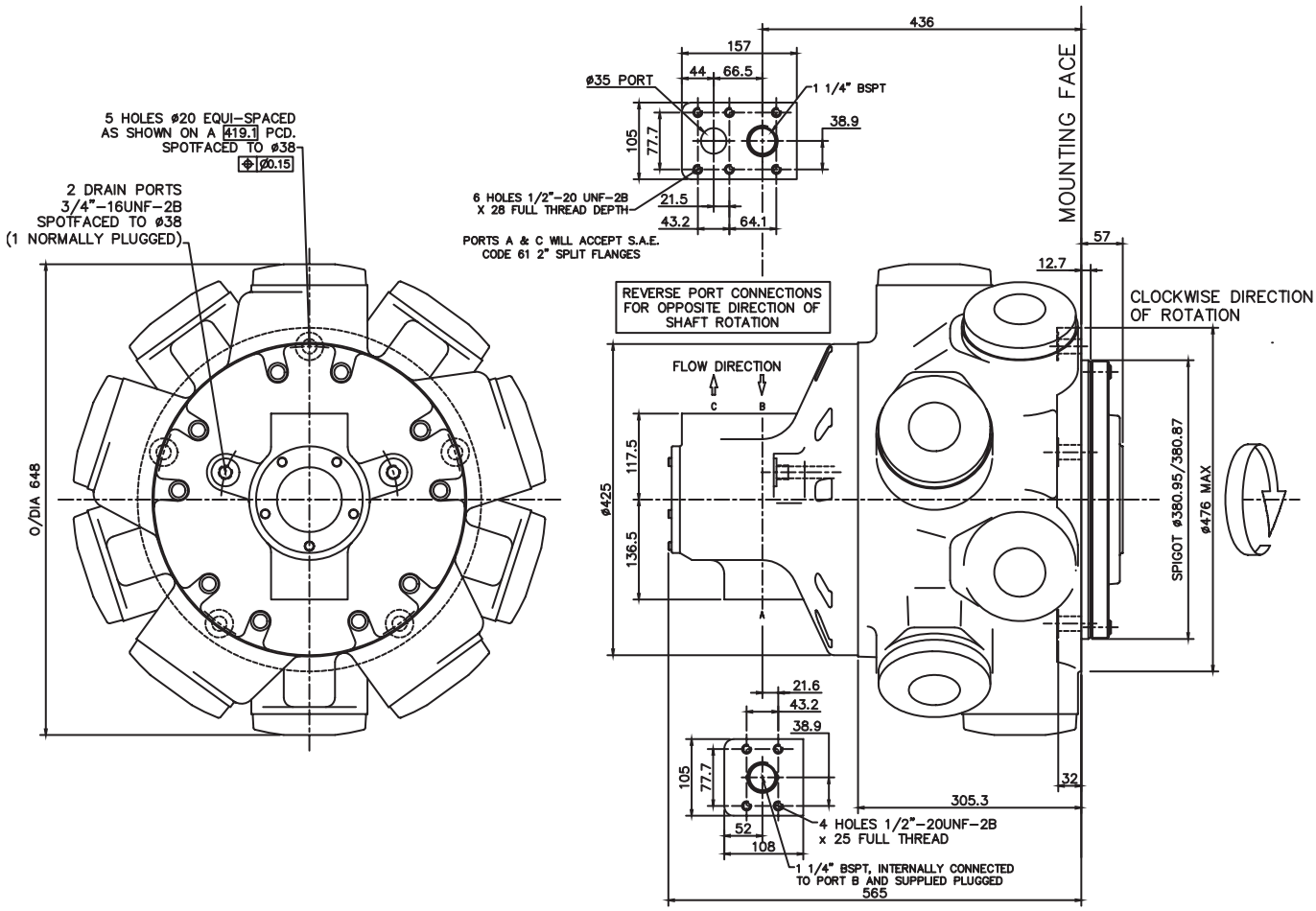

3-11 Preferred Hydraulic Connections

SAE Connections

MODEL	'SF3/SFM3' 1 ¼" Code 61 SAE Ports								
	ØS	V	T	R	W	X(SF3)	X(SFM3)	P	Q
HMB030	32	76	30.2	58.7	87.1	7/16"-14 UNC-2B x 27 FULL THREAD DEPTH	M12 x 1.75 x 27 FULL THREAD DEPTH	271	331
HMB045								300	360
HMB060/080/100								286	346
HMB125									
HMB150/200								328	388

SFM3/SF3

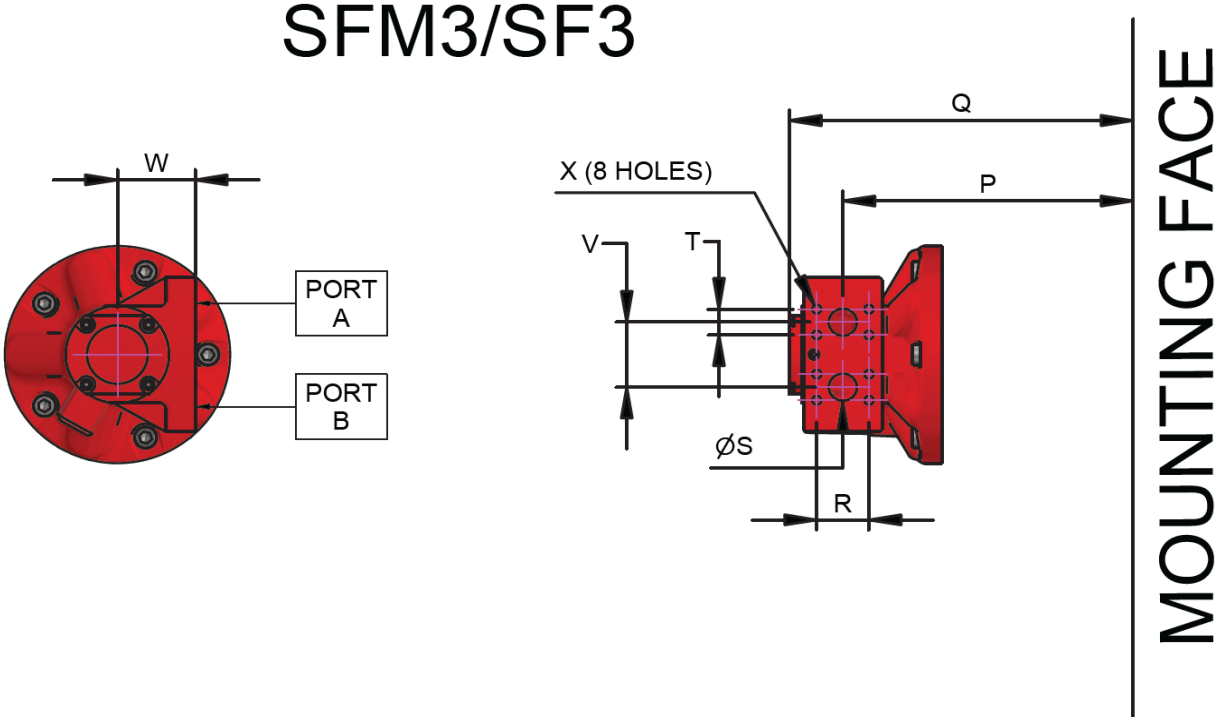

*other porting options avaliable upon request

MODEL	'F3/FM3' 1 ¼" SAE Bolt Flanges									
	ØS	V	T	R	W	X(F3)	X(FM3)	P	P1	Q
HMB030	31.75	74	58.7	30.2	87	7/16"-14 UNC-2B x 27 FULL THREAD DEPTH	M12 x P1.75 x 27 FULL THREAD DEPTH	238	46.5	331
HMB045								267.5		360
HMB060/080/100								253		345
HMB125								283		375
HMB150/200								295		388

F3 / FM3

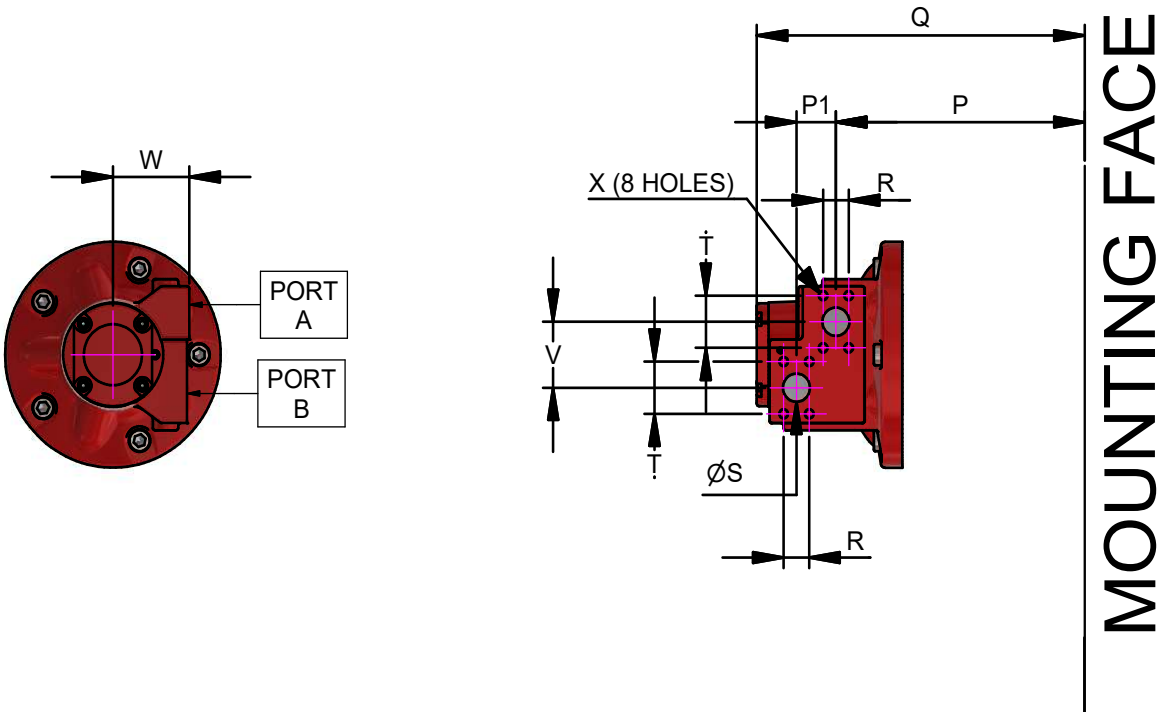

MODEL	'SF4/SFM4' 1 ½" Code 62 SAE Ports								
	ØS	V	T	R	W	X(SF4)	X(SFM4)	P	Q
HMB045	38.1	116	36.5	79.4	154	5/8"-11 UNC-2B x 35 FULL THREAD DEPTH	M16 x 2.0 x 35 FULL THREAD DEPTH	330	413
HMB060/080/100								316	399
HMB125									
HMB150/200								358	441

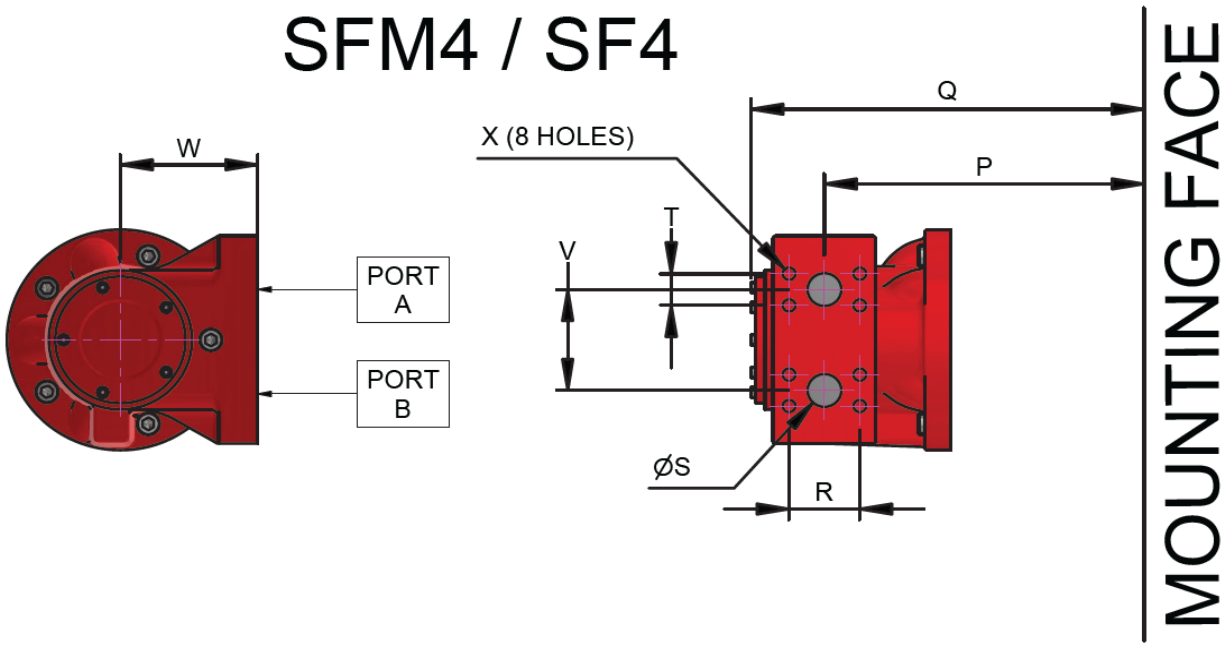

MODEL	'FM4' 1 ½" SAE Bolt Flanges									
	ØS	V	T	R	W	X(F4)	X(FM4)	P	P1	Q
HMB100	38.1	148	79.4	36.5	130	5/8"-11 UNC-2B x 35 FULL THREAD DEPTH	M16 x P2 x 35 FULL THREAD DEPTH	266	321	399
HMB125								296	351	429
HMB150/200								308	363	442
HMB270/325					174			324	379	460

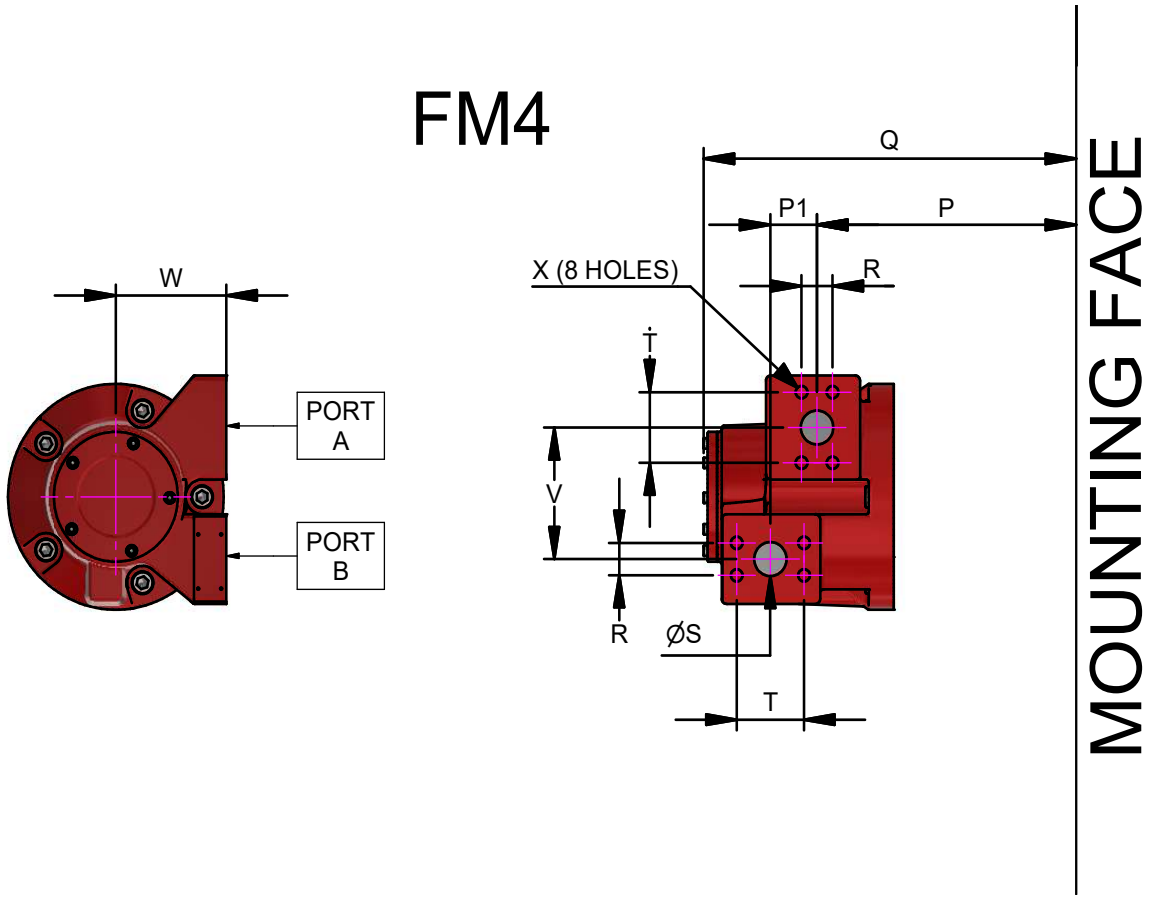

3-11 Preferred Hydraulic Connections (cont)

SAE Connections - HMHDB400/500

MODEL	'SFM45' 2" Code 62 SAE Ports							
	ØS	V	T	R	W	F	P	Q
HM(HD)B400/500	50	120	44.5	96.8	145	M20 x 2.5 x 38 FULL THREAD DEPTH	478	567

SFM45

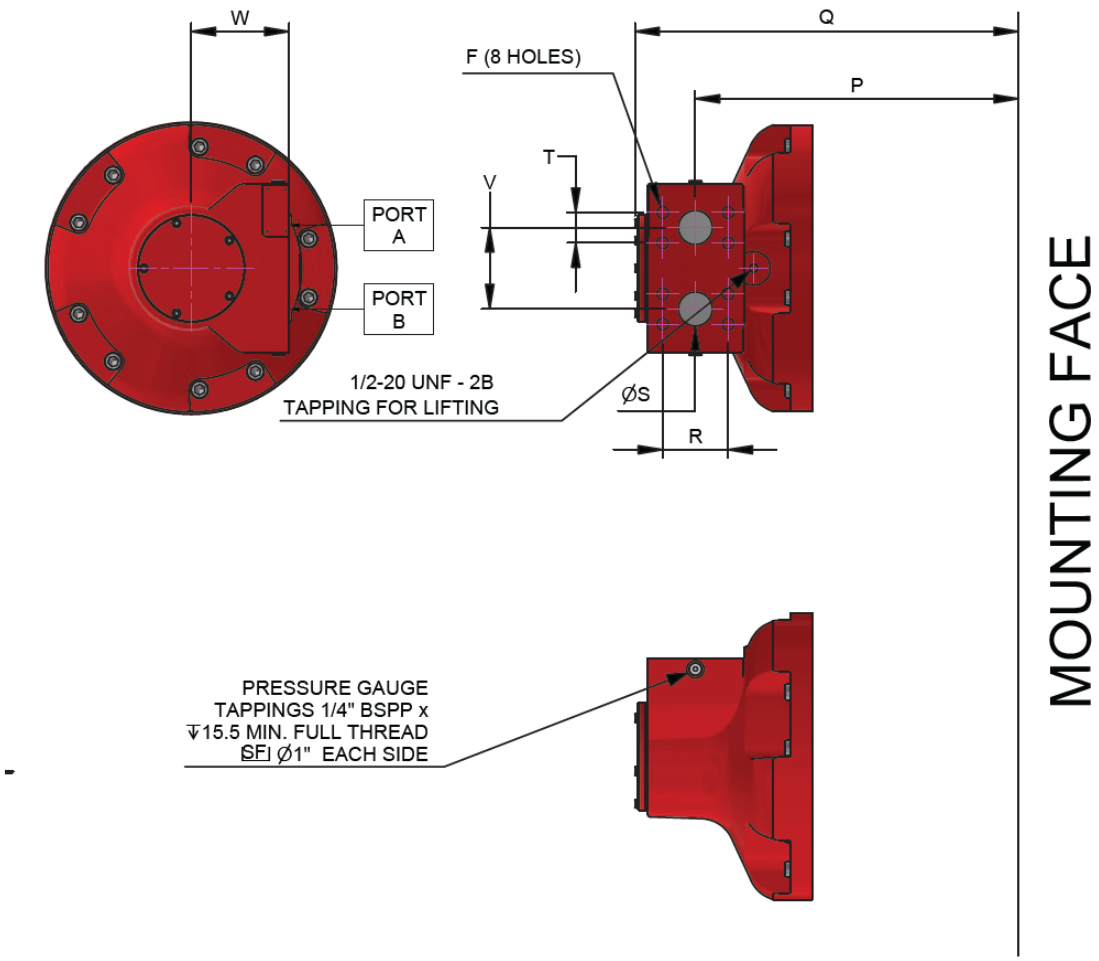

*other porting options avaliable upon request

3-11 Preferred Hydraulic Connections (cont)

Manifold connections

MODEL	'SM3' 1 ¼" Ports for Bolt-On Manifold									
	ØS	V	T	R	W	P	Q	X1	X2	X3
HMB030	32	76	143	62	87.1	270.5	332	14	20	30
HMB045						300	360			
HMB060/080/100						286	346			
HMB125						315	375			
HMB150/200						358	440			
HMB270/325						385	459			

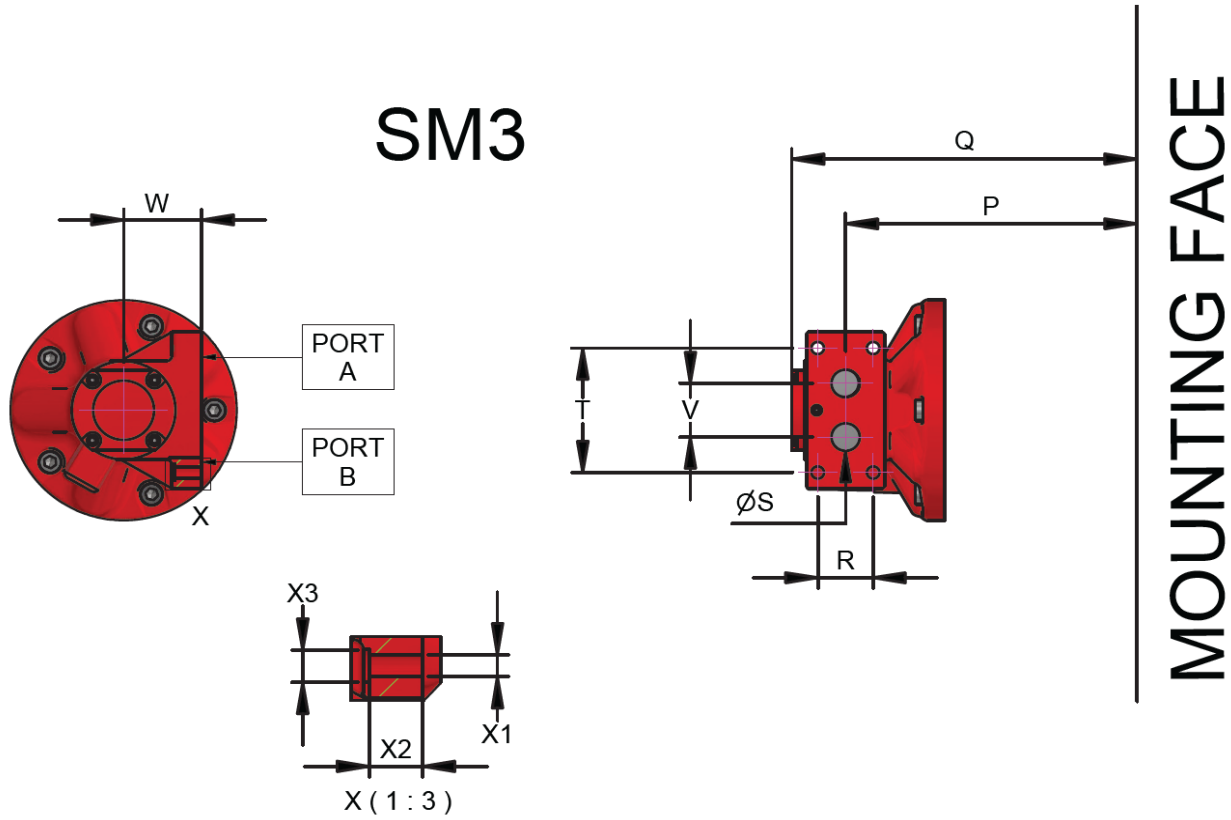

MODEL	'SM4' 1 ½" Ports for Bolt-On Manifold									
	ØS	V	T	R	W	P	Q	X1	X2	X3
HMB030	38.0	116	194	68	154	301	383	17	28	25
HMB045						331	413			
HMB060/080/100						316	399			
HMB125						345	428			
HMB150/200						358	441			
HMB270/325					185	377	459			

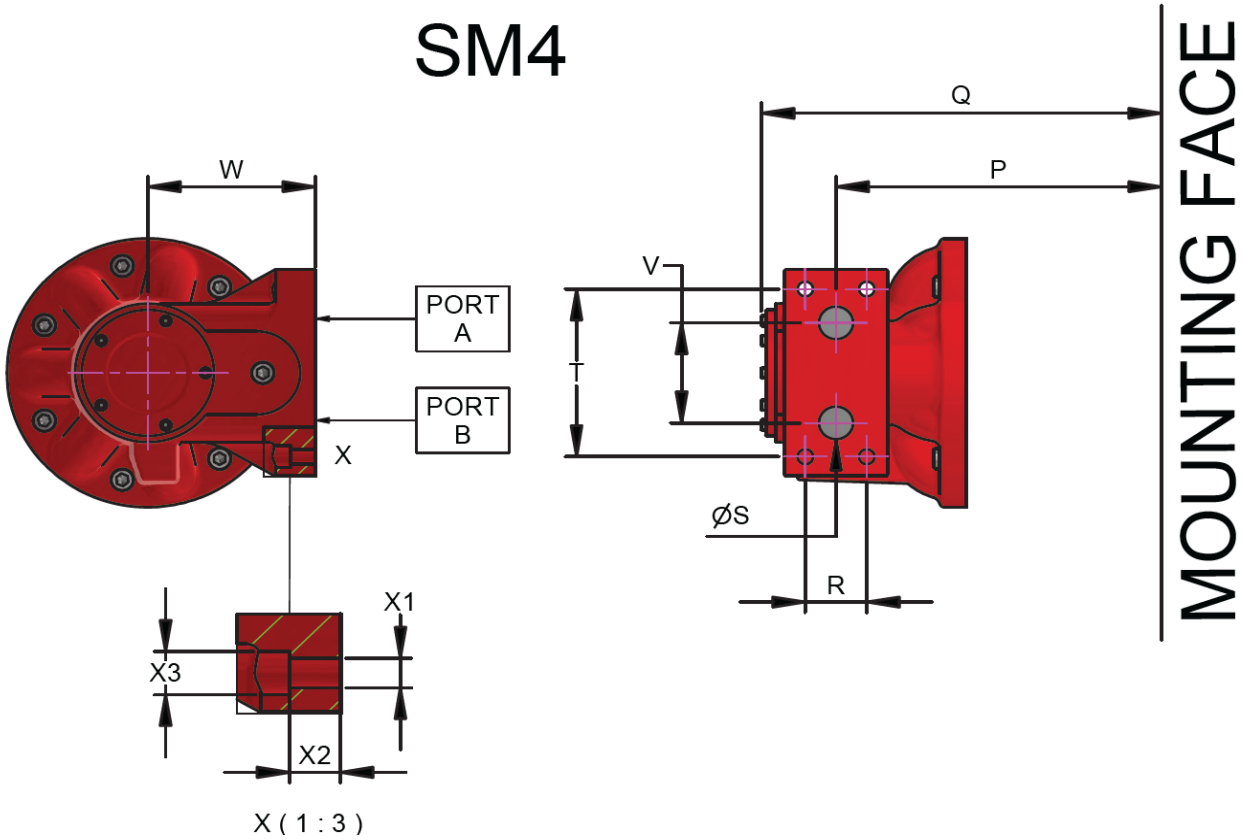

*other porting options avaliable upon request

Conversion Table

Pressure	
bar	PSI
1	14.5
Flow	
l/min	gal/min
1	0.264 US
1	0.219 UK
Length	
mm	inch
25.4	1
Torque	
Nm	lbf ft
1	1.737
Power	
kW	hp
1	1.341
Mass	
kg	lb
1	2.2

KAWASAKI PRECISION MACHINERY (UK) LTD
Ernesettle, Plymouth
Devon, PL5 2SA, England

Tel: +44 1752 364394
Fax: +44 1752 364816
Mail: info@kpm-uk.co.uk
Website: www.kpm-eu.com

OTHER GLOBAL SALES OFFICES

JAPAN
Kawasaki Heavy Industry Ltd, Precision Machinery Ltd. Tokyo Office World Trade Center Bidg.
4-1 Hamamatsu-cho
2-chome, Minato-ku
Tokyo 105-6116
Japan
Tel: +81-3-3435-6862
Website: www.khi.co.jp/kpm

U.S.A
Kawasaki Precision Machinery (U.S.A.), Inc.
3838 Broadmoor Avenue S.E.
Grand Rapids
Michigan 49512
U.S.A.
Tel: +1-616-975-3101
Website: www.kpm-usa.com

CHINA
Kawasaki Precision Machinery Trading (Shanghai) Co., Ltd. 17th Floor (Room 1701), The Headquarters Building No168 XiZang Road (M)
Huangpu District
Shanghai 200001
China
Tel: +86-021-3366-3800

The specified data is for product description purposes only and may not be deemed to be guaranteed unless expressly confirmed in the contract.

Data sheet:M200112.24-HMB