Kawasaki
Powering your potential

Precision Machinery Company

Dual Displacement Radial Piston High Power Staffa Motor

HPC Series

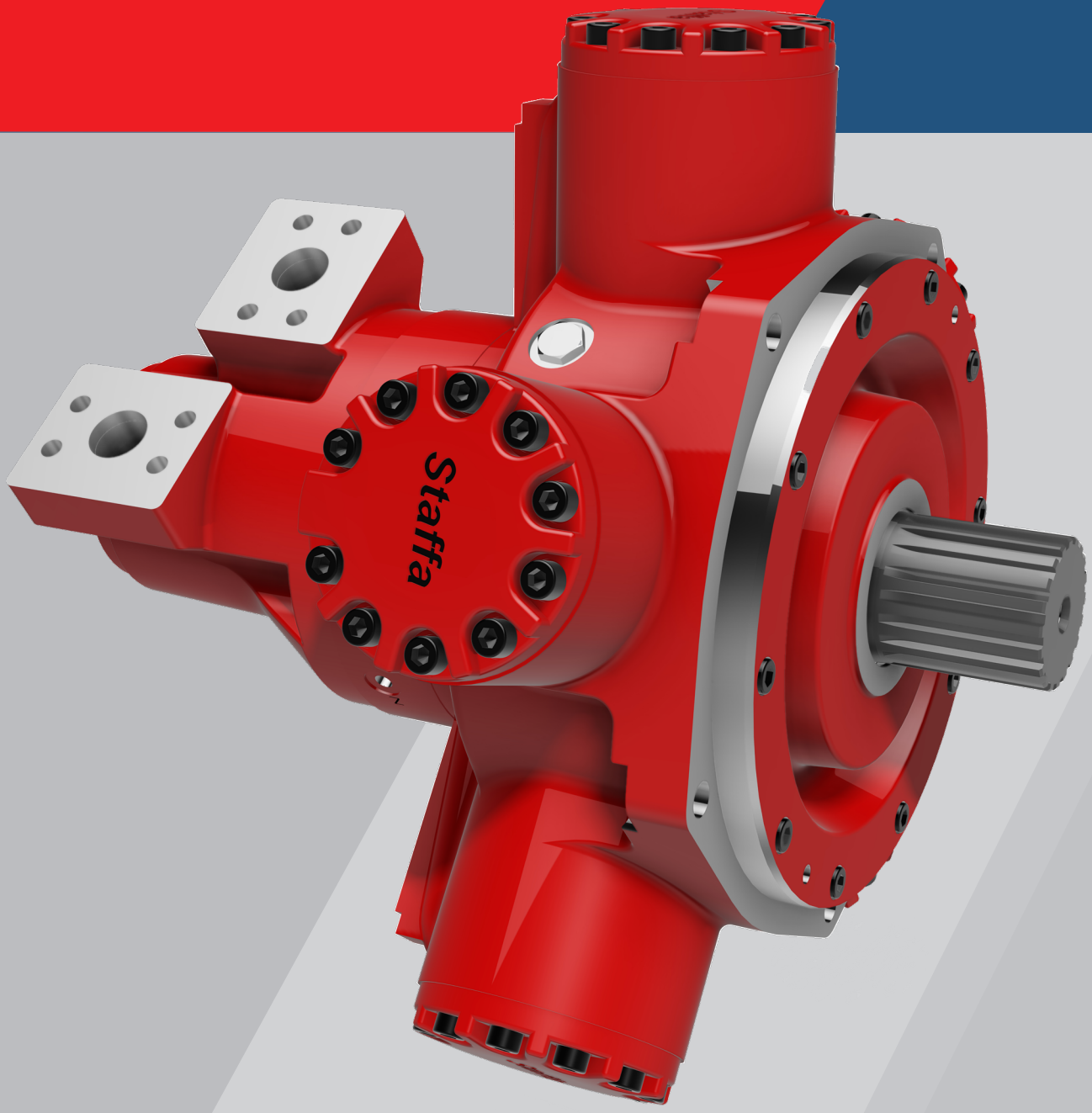

CONTENTS

Specifications and Features 3

1. Ordering Code

1-1. Model Coding 4 - 5

1-2. Shaft Options 6

1-3. Main Port Connection Options 7

1-4. Special Features 8 - 20

2. Technical Information

2-1. Performance Data 21 - 26

2-2. Volumetric Efficiency Data 27

2-3. Shaft Power Calculations 28

2-4. Functional Symbols 29

2-5. Shaft Stress Limits 30

2-6. Bearing Life Notes 31

2-7. Circuit and Application Notes 32 - 34

2-8. Crankcase Flushing Flow 35

2-9. Motor Operation at Low Temperatures 36

2-10. Crankcase Drain Connections 37

2-11. Freewheeling Notes 38

2-12. Installation Data 39

3. Dimensions

3-1. HPC080 Installation 40 - 45

3-2. HPC125 Installation 46 - 51

3-3. HPC200 Installation 52 - 57

3-4. HPC270 Installation 58 - 62

3-5. HPC325 Installation 63 - 67

3-8. Speed Sensing Options 68

HPC Series

Dual Displacement Radial Piston Hydraulic Motor

General Descriptions

The enhanced version of the standard C series motor includes special low friction components combined with crankcase flushing flow to achieve increased shaft power.

The range of HP motors extends from the HPC080 of 1,600 cc/rev to the HPC325 of 5326 cc/rev.

Kawasaki "Staffa" high torque, low speed radial piston motors use hydrostatic balancing techniques to achieve high efficiency, combined with good breakout torque and smooth running capability.

The HPC series dual displacement models have two pre-set displacements which can be chosen from a wide range to suit specific application requirements. The displacements are hydraulically selected by a directional control valve which can be remote mounted or directly on the motor. Motor displacement can be changed with ease when the motor is running.

These motors are also available in a continuously variable version using either hydro-mechanical or electrohydraulic control methods.

Other mounting options are available on request to match many of the competitor interfaces.variable version using either hydro-mechanical or electro-hydraulic control methods.

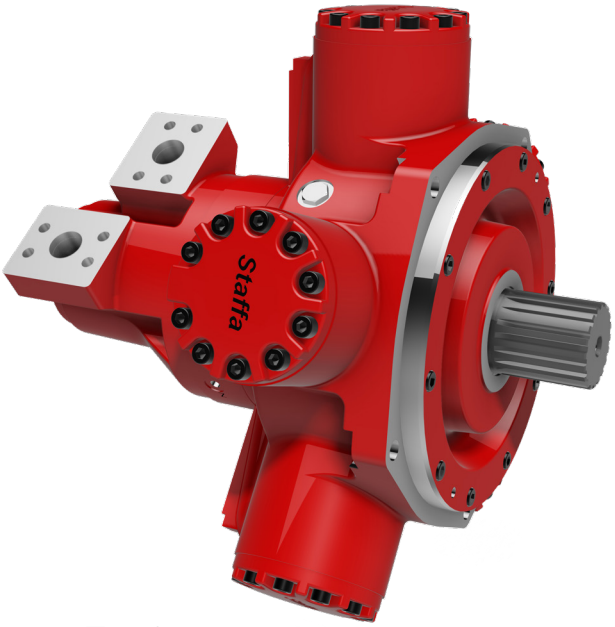

Features

- **Enhanced power performance**
- **Increased speed**
- **Improved starting and running efficiency**
- **Increased back pressure capability**
- **Speed sensing options**
- **High torques at low speed**
- **Smooth running**
- **Wide range of displacements to suit specific applications**
- **Displacement changes with ease when the motor is running**
- **Various mounting options**

	Displacement (cc/rev)	Ideal Specific Torque (N m/bar)	Mechanical Efficiency (%)	Operating Pressure (bar)	Peak Pressure (bar)	Power Rating (kW)	Speed Rating (rpm)	Freewheel Speed (rpm)
HPC080	1,600	25.5	94.5	300	405	165	600	1500
HPC125	2,048	32.6	94.5	300	405	202	600	1500
HPC200	3,087	49.1	96.3	300	405	261	600	1500
HPC270	4,588	73.0	96.0	300	405	278	600	1500
HPC325	5,326	84.8	96.3	300	405	278	600	1500

**For detailed performance figures see pages 21 - 41.*

1 Ordering Code

1-1 Model Coding

F11/HPC270/S3 V/250/100/FM3/CS/TJ/ */ P*****

Fluid Type

(refer to page 21 for performance data)	
Blank	Mineral oil
F3	Phosphate ester (HFD fluid)
F11	Water based fluids (HFA, HFB & HFC)
Alternative fluids contact Kawasaki	

Motor Frame Size

080	200	325
125	270	

Shaft Type

See shaft type option list on page 6

Shaft

Vertically Up

High Displacement Code

###	See displacement code details on pages 21 to 26

Low Displacement Code

###	See displacement code details on pages 21 to 26

Special Features

P*****	See options on page 5.
PL***	Non-catalogued features, (*****) = number assigned by Kawasaki as required

Design Series Number

Current series for HPC motors

Tacho Encoder Drive

Blank	None
Tj	Square wave output with directional signal
Tk	Combines Tj with the T401 instrument to give a 4 to 20 mA output proportional to speed. Directional signal and speed relay output.

Displacement Control Ports

Threaded ports/ bi directional shaft rotation	
X	X and Y ports G¼¯ (BSPF to ISO 228/1)

ISO 4401 size 03 mounting face / bi-directional shaft rotation	
C	No shuttle
CS	With shuttle
ISO4401 size 03 mounting face/uni-directional shaft rotation (viewed on shaft end).	

Main Port Connections

See Port Connection details on page 7

1-1 Model Coding

Special Features Suffix

Special Features Suffix

/ P * * * * *

Shaft Seal Enhancements

A	High pressure shaft seal
B	Improved shaft seal life
C	High pressure shaft seal & improved shaft seal life
0	None

See Section 2-12 for details

External Protection

B	Marine-specification primer paint
D	Unpainted
E	Marine Specification Cylinder Heads
F	Marine spec Cylinder Heads + Marine specification paint HP20
G	Marine spec Cylinder Heads + Carboline grey paint
0	None

See Section 2-12 for details

Installation Features

A	Drain port adaptor x 1
B	Drain port adaptor x 2
C	Φ21 mm mounting holes
D	Φ22 mm mounting holes
E	Φ21 mm mounting holes & Drain port adaptor x 1
F	Φ21 mm mounting holes & Drain port adaptor x 2
G	Φ22 mm mounting holes & Drain port adaptor x 1
H	Φ22 mm mounting holes & Drain port adaptor x 2
0	None

See Section 2-11 for details

Valve Enhancements

A	Improved cavitation resistance
B	Anti-clockwise
C	Thermal shock resistance
D	Improved caviation resistance & anti-clockwise
E	Improved cavitation resistance & thermal shock resistance
F	Anti-clockwise & thermal shock resistance
G	Improved cavitation resistance & anti-clockwise & thermal shock resistance
0	None

See Section 2-12 for details

Performance Enhancements

A	Increased starting torque
0	None

See Section 2-12 for details

1-2 Shaft Options

Product type

HPC080

P	=	Parallel keyed 60mm diameter shaft
S	=	Splined shaft 14 teeth BS3550
Z	=	Splined shaft DIN5480 (W70x3x22x7h)
T	=	Long taper keyed shaft- 95.2 key slot

HPC125 & HPC200

P1	=	Parallel keyed 85mm diameter shaft
S3	=	Splined shaft 20 teeth BS3550
S4	=	Splined shaft 16 teeth BS3550
Z3	=	Splined shaft DIN5480 (W85x3x27x7h)
T	=	Long taper keyed shaft - 133.4 key slot

HPC270 & HPC325

P1	=	Parallel keyed 85mm diameter shaft
S3	=	Splined shaft 20 teeth BS3550
Z4	=	Splined shaft DIN5480 (W90x4x21x7h)
T	=	Long taper keyed shaft - 133.4 key slot

Note:
For installations where the shaft is vertically upwards specify “V” after the shaft type designator so as to ensure that an additional high level drain port is provided within the front cover of the motor.

1-3 Main Port Connections

Product type

HPC080

F3	=	1¼" SAE 4-bolt flange
FM3	=	1¼" SAE 4-bolt flange
F4	=	SAE 1½" 4-bolt UNC flanges
FM4	=	SAE 1½" 4-bolt metric flanges

HPC125

F3	=	3000 series SAE 4-bolt flange
FM3	=	SAE 1½" 4-bolt UNC flanges
F4	=	SAE 1½" 4-bolt UNC flanges
FM4	=	SAE 1½" 4-bolt metric flanges

HPC200

F3	=	1¼" SAE 61 4-bolt flange
FM3	=	1¼" SAE 61 4-bolt flange
F4	=	SAE 1½" 4-bolt UNC flanges
FM4	=	SAE 1½ 4-bolt metric flanges

HPC270

F4	=	1½" SAE code 62 4-bolt flange
FM4	=	1½" SAE code 62 4-bolt flange

HPC325

F4	=	1½" SAE code 62 4-bolt flange
FM4	=	1½" SAE code 62 4-bolt flange

See pages 40 to 67 for full dimensionsal details

1-4 Special Features

Feature	Page	HPC080	HPC125	HPC200	HPC270	HPC325
High Pressure Shaft Seal	9	●	●	●	●	●
Improved Shaft Seal Life	10	●	●	●	●	●
Improved Cavitation Resistance	11	●	●	●	●	●
Increased Starting Torque	13	●	●	●	●	●
Anti-clockwise Rotation	15	●	●	●	●	●
Thermal Shock Resistance	16	●	●	●	●	●
Drain Port Adaptor - ½" BSPP	18	●	●	●	●	●
Φ21mm Mounting Holes	19	●	●	●	●	●
Φ22mm Mounting Holes	19	●	●	●	●	●
Marine-specification Primer Paint	20	●	●	●	●	●

● Available
○ Not available

If a motor is to be ordered with any special features listed, please contact Kawasaki.

1-4 Special Features

High Pressure Shaft Seal

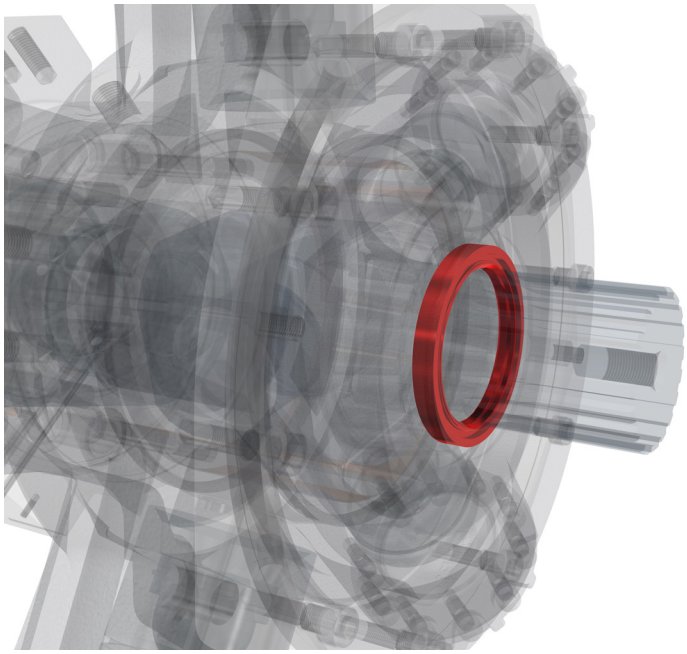

Description:

> 10 bar rated

> Recommended for cold climates

> Rugged steel and PTFE construction

Technical Information

Where crankcase pressure will be higher than 3.5 bar, the high pressure shaft seal should be selected.

Case pressure	≤ 10 bar
Non-operating temperature limits	Below -30°C and above 120°C
Minimum operating temperature	-15°C
Maximum operating temperature	80°C
Minimum viscosity	2,000 cSt
Maximum viscosity	150 cSt

Applicable to:

HPC080	HPC125	HPC200	HPC270	HPC325
●	●	●	●	●

Please contact Kawasaki to order this feature.

1-4 Special Features

Improved Shaft Seal Life

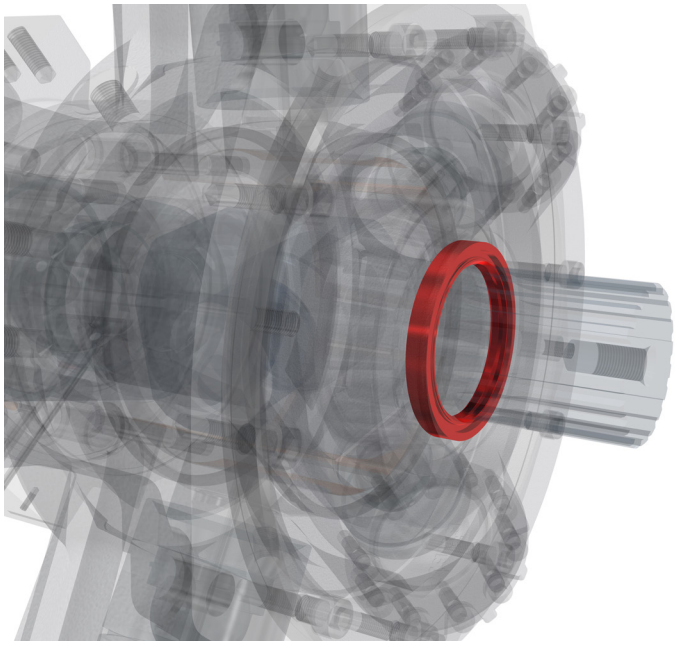

Description:

> Stainless steel sleeve prevents corrosion

> Improved wear resistance

> Recommended for corrosive environments

Technical Information

A well-established method of increasing rotary seal life in corrosive environments is to fit a thin-walled, stainless steel sleeve to the rotating shaft to provide a corrosion-resistant, wear-resistant counterface surface for the seal to run against. All HPC motors can be fitted with such sleeves upon request.

Sleeve material	A304/301 Stainless Steel
Sleeve surface finish	R_a 0.25 to 0.5 µm (10 to 20 µin)

Applicable to:

HPC080	HPC125	HPC200	HPC270	HPC325
●	●	●	●	●

Please contact Kawasaki to order this feature.

1-4 Special Features

Improved Cavitation Resistance

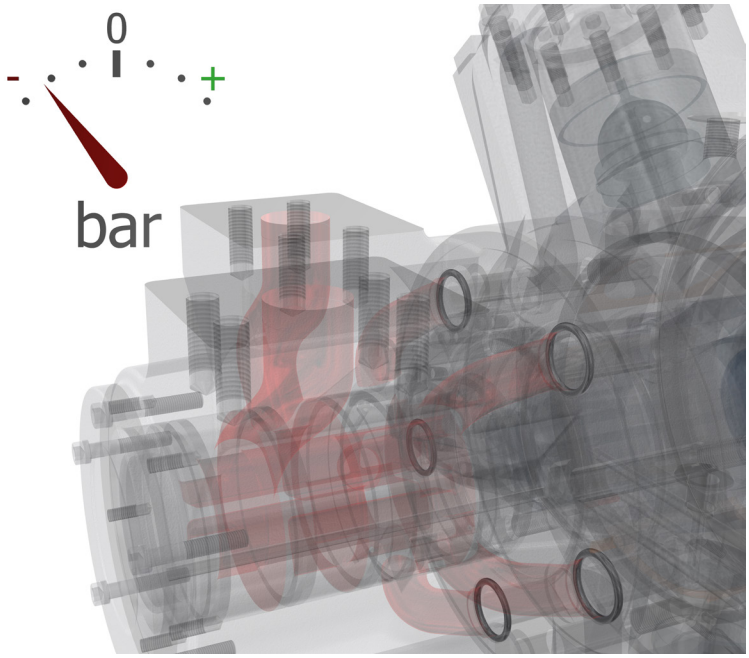

Description:

> **Recommended for overunning applications**

> **Protects against seal damage for short periods of operation in vacuum inlet conditions.**

Cavitation can occur due to many different factors. Although it is not possible to make the HMC motor resistant to cavitation, certain features can be added to improve the motor's resistance to short periods of lost port pressure.

In applications where the HPC motor can be driven (like a pump) a risk arises that insufficient fluid will be provided to maintain a positive pressure at both main ports of the motor causing cavitation. The results of extended running at these conditions can be catastrophic to the motor's function.

The improved cavitation resistance feature should be considered where:

- Overrunning conditions may occur (load driving the motor)
- Loss of main port pressure while motor is rotating

Applicable to:

HPC080	HPC125	HPC200	HPC270	HPC325
●	●	●	●	●

Please contact Kawasaki to order this feature.

1-4 Special Features

Increased Starting Torque

Description:

> Optimised for high break-out torque

> Recommended for low speed operation

> Improved service life for low speed applications

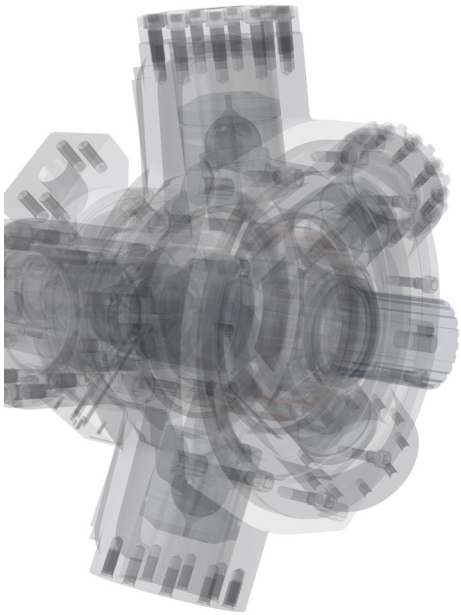

Technical Information

If an application demands the drive motor be run at speeds of less than 10 rpm for most of the duty cycle, or involves frequent start/stop or forward/reverse operation, the Staffa HMC motor range has it covered.

By optimising the HPC motor's design for low speeds, it is possible to increase the break out torque and low speed mechanical efficiency performance.

All figures given in Section 2-1 Performance Data are still valid when selecting this feature.

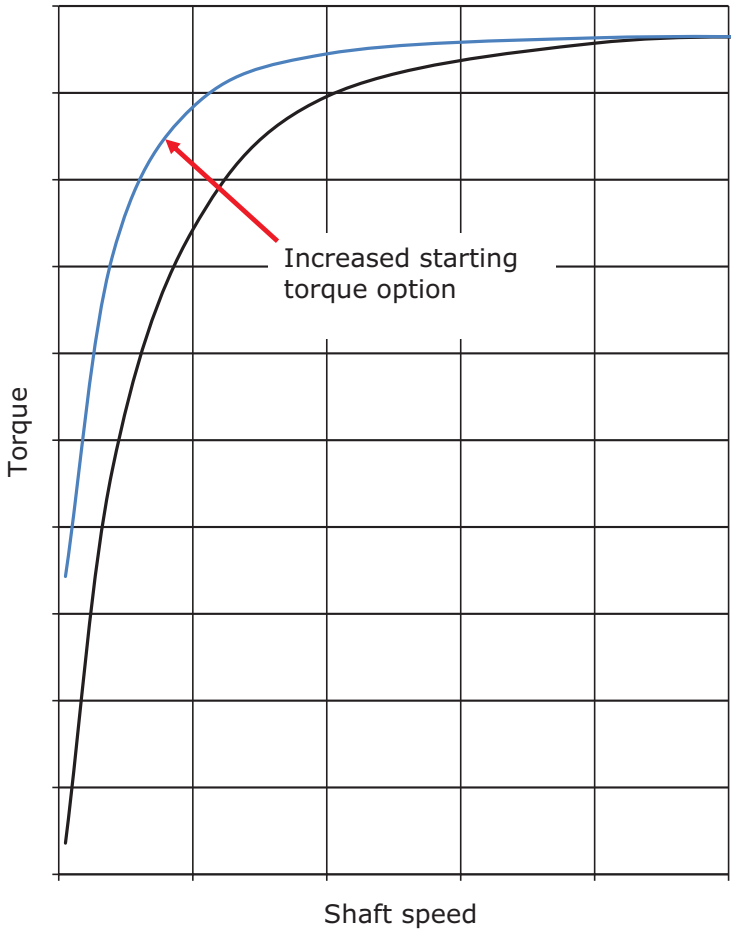

1-4 Special Features

Increased Starting Torque (cont)

Volumetric Performance

In order to achieve increased torque at low speeds the volumetric characteristics of the motor performance are changed.

When calculating leakage and volumetric efficiency use the constants shown here in place of those given for the standard motor on page 27.

Motor Type	Geometric Displacement	Zero Speed Constant	Speed Constant	Creep Speed Constant	Crankcase Leakage Constant
	cc/rev	K1	K2	K3	K4
HPC080	1,344	16.26	45.70	9.65	14.66
HPC125	2,048	12.86	38.50	4.55	11.01
HPC200	3,087	12.86	38.50	3.02	11.01
HPC270	4,588	13.26	37.30	2.41	12.76
HPC325	5,326	13.26	40.00	2.08	12.76

Applicable to:

HPC080	HPC125	HPC200	HPC270	HPC325
●	●	●	●	●

Please contact Kawasaki to order this feature.

1-4 Special Features

Anti-Clockwise Rotation

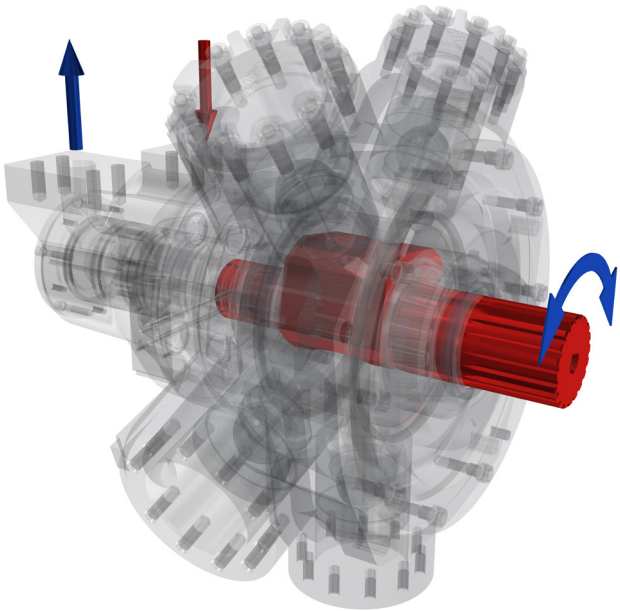

Description:

> Reduce installation complexity

> Standardise equipment designs

Technical Information

All HPC motors can be specified with an anti-clockwise rotation valve configuration. All performance and volumetric characteristics remain unchanged.

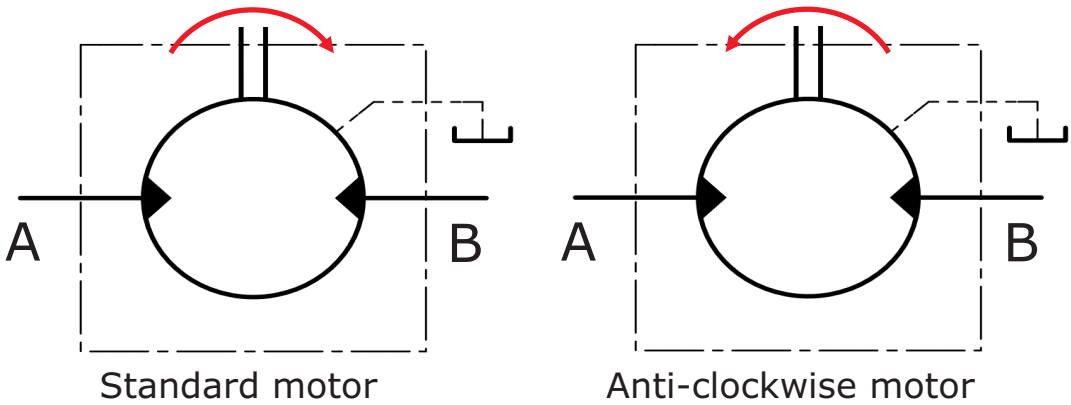

Applicable to:

HPC080	HPC125	HPC200	HPC270	HPC325
●	●	●	●	●

Please contact Kawasaki to order this feature.

1-4 Special Features

Thermal Shock Resistance

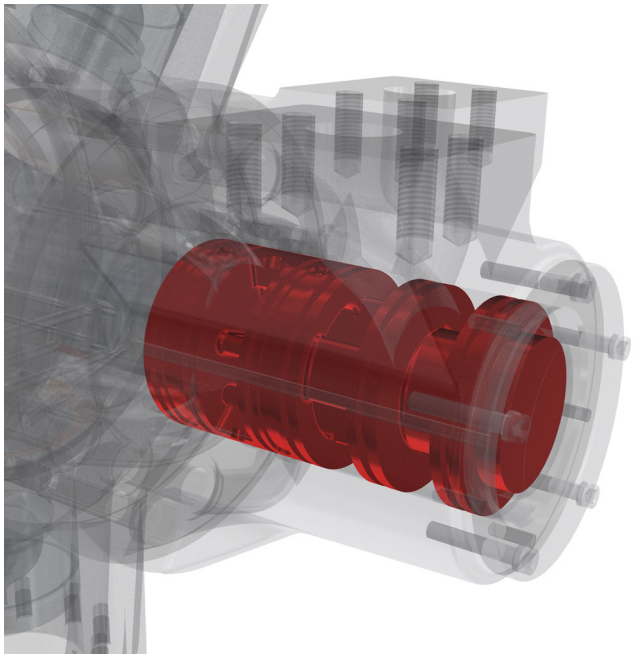

Description:

> Recommended for cold climates

> Optimised for start-up in freezing temperatures

> Engineered for total peace of mind

Technical Information

Starting up a cold system with warm hydraulic fluid is a known cause of heavy wear and potential seizure of hydraulic machinery. To minimise this potential risk, the HPC motor can be configured to combat thermal shocks to give complete peace of mind when operating in very cold climates.

Volumetric Performance

In order to provide thermal shock resistance the volumetric characteristics of the motor performance are changed. When calculating leakage and volumetric efficiency use the constants shown on the next page in place of those given for the standard motor on page 27.

All figures given in Section 2-1 Performance Data are still valid when selecting this feature.

Note:
When operating at low temperature, consideration must be given to the guidance notes in Section 2-9 Motor Operation at Low Temperature (see page 36).

1-4 Special Features

Thermal Shock Resistance (cont)

Motor Type	Geometric Displacement	Zero Speed Constant	Speed Constant	Creep Speed Constant	Crankcase Leakage Constant
	cc/rev	K1	K2	K3	K4
HPC080	1,344	11.10	45.70	6.99	7.90
HPC125	2,048	7.70	38.50	3.78	4.25
HPC200	3,087	7.98	38.50	2.61	4.25
HPC270	4,588	8.38	37.30	1.91	6.00
HPC325	5,326	8.38	40.00	1.65	6.00

Applicable to:

HPC080	HPC125	HPC200	HPC270	HPC325
●	●	●	●	●

Please contact Kawasaki to order this feature.

1-4 Special Features

Drain Port Adaptors

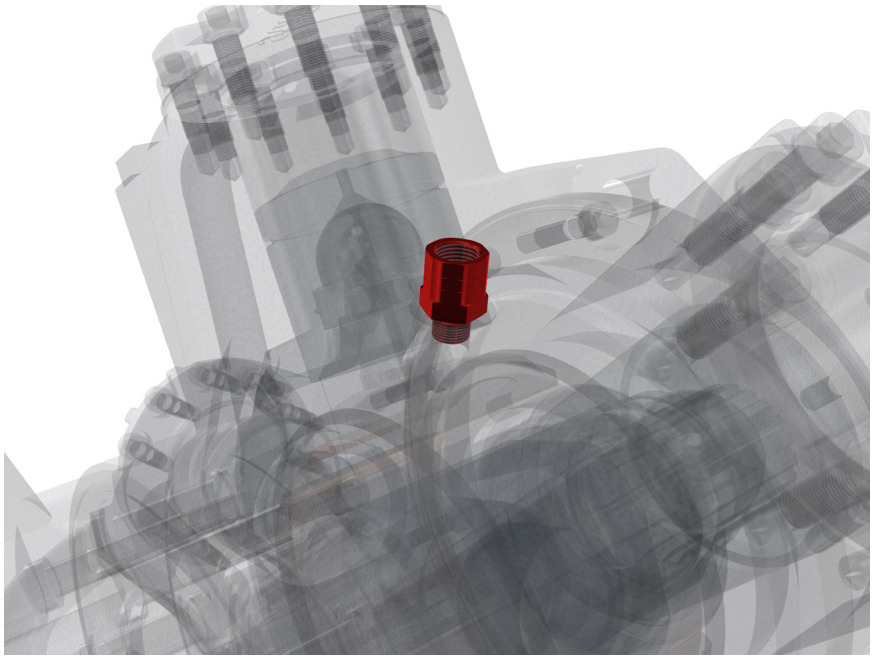

Description:

> Improves manufacturing logistics

> Motor supplied ready for connection to 1½" BSPP male fitting

Technical Information

Motor Type	Adaptor Supplied
HMC030	¾" UNF 2B to ½" BSPP
HMC045	¾" UNF 2B to ½" BSPP
HMC080	¾" UNF 2B to ½" BSPP
HM(HD)C125	¾" UNF 2B to ½" BSPP
HM(HD)C200	¾" UNF 2B to ½" BSPP
HM(HD)C270	¾" UNF 2B to ½" BSPP
HM(HD)C325	¾" UNF 2B to ½" BSPP

One or two drain adaptors can be supplied.

Applicable to:

HPC080	HPC125	HPC200	HPC270	HPC325
●	●	●	●	●

Please contact Kawasaki to order this feature.

1-4 Special Features

Mounting Hole Diameter

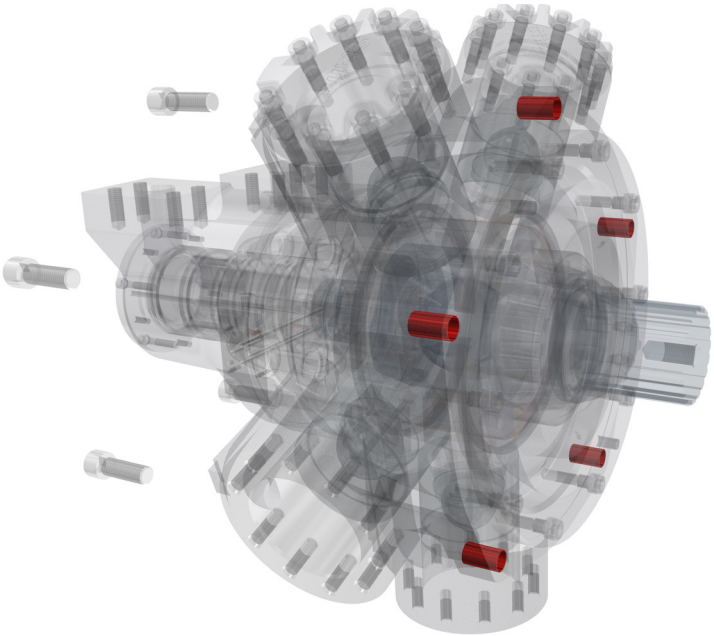

Description:

> Matching mounting holes to bolts

> Φ21mm and Φ22mm options available

Technical Information

In different markets, different bolt standards are adopted which may not be best suited to the standard Φ20 mm mounting hole diameter on the HMC motors. To give a correct fit and optimum installation, Φ21 mm or Φ22 mm holes can be selected.

Applicable to:

HPC080	HPC125	HPC200	HPC270	HPC325
●	●	●	●	●

Please contact Kawasaki to order this feature.

1-4 Special Features

Marine Specification Primer Paint

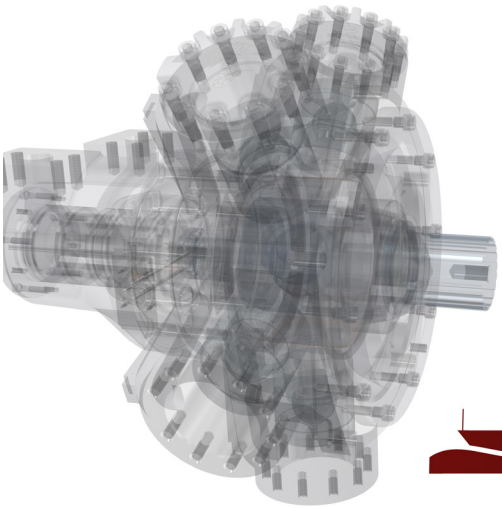

Description:

> Improves corrosion and water resistance of the finishing system

> Excellent adhesion strength

> Recommended for marine applications

Technical Information

Colour	Red oxide
Type	Single pack epoxy etching primer
Standard	BS 3900 part A 8
Dry film thickness	> 12 µm

Applicable to:

HPC080	HPC125	HPC200	HPC270	HPC325
●	●	●	●	●

Please contact Kawasaki to order this feature.

1-4 Special Features

Tj speed sensor technical specification

The Tj speed sensor is a hall effect dual channel speed probe that can provide feedback of both speed and direction.

Signal Outputs:	Square wave plus directional signal
Power Supply:	8 to 32V @ 40mA
Protection Class:	IP68
Output Frequency:	16 pulses/revolution

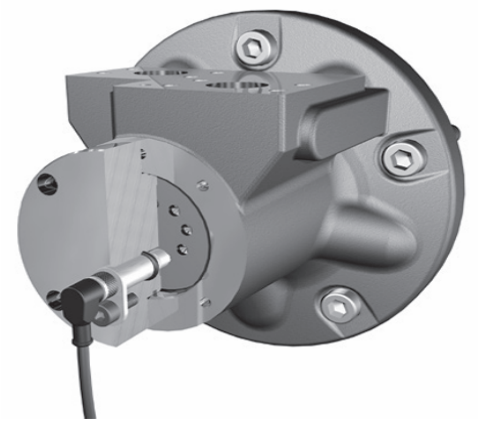

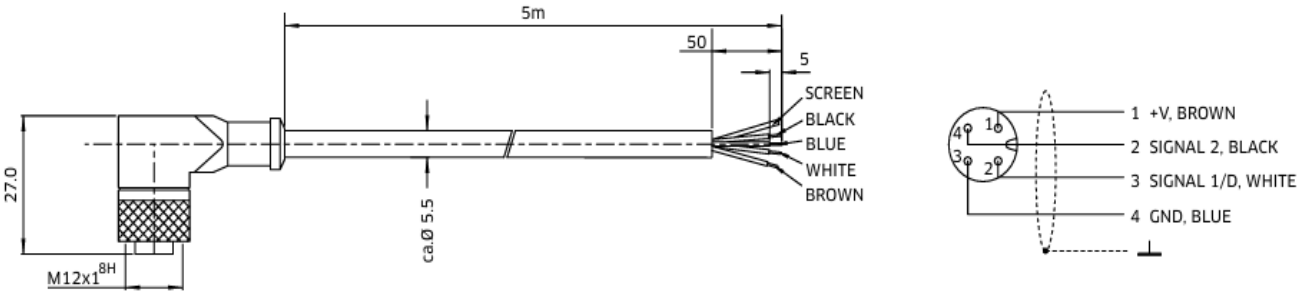

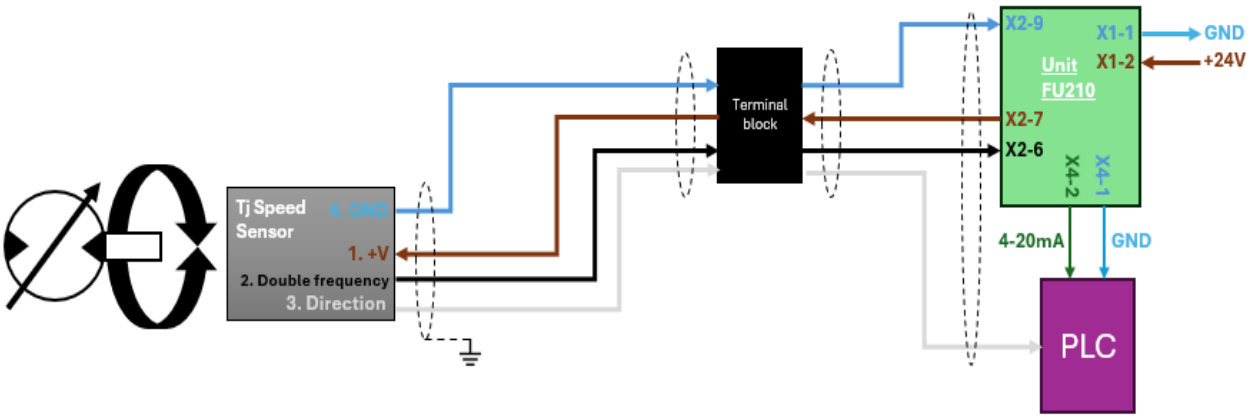

1-4 Special Features

Ts readout option

The Ts option consists of the Tj speed sensor together with the optional FU210 output module.

The addition of the FU210 module provides a software configured single channel tachometer and relay with a /4-20mA analogue current output which comes pre-programmed with the motor.

For more in-depth information please contact KPM UK.

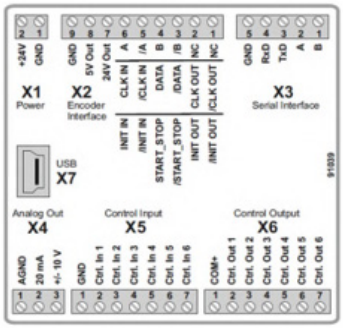

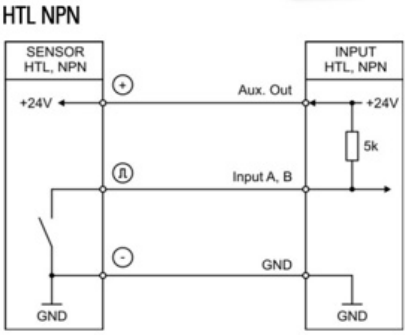

Installation Details

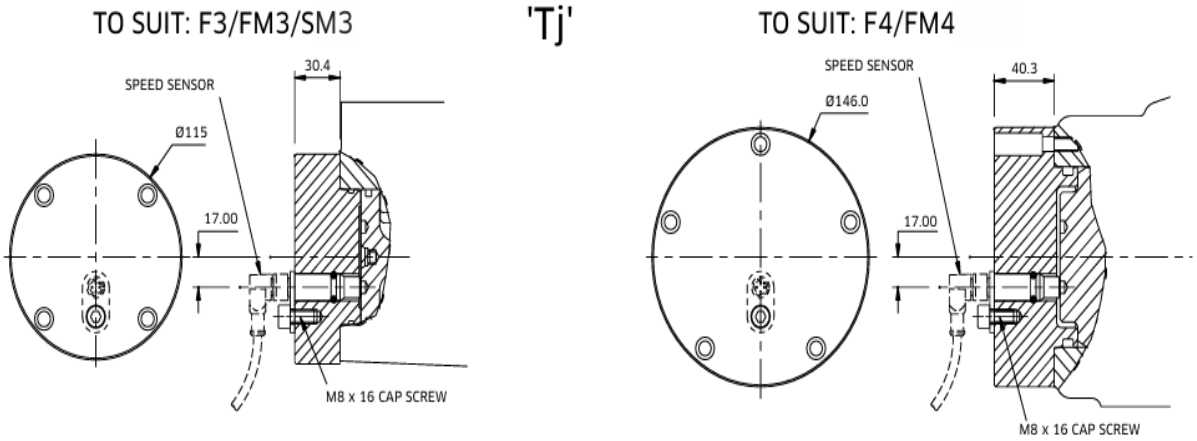

2 Technical Information

2-1 Performance Data

Performance data is valid for the range of HPC motors when fully run-in and operating with mineral oil.

The appropriate motor displacements can be selected using performance data shown on pages 22 to 26. Refer to the table on this page for pressures and speed limits when using fire-resistant fluids.

Rating definitions

Continuous rating

For continuous duty the motor must be operating within each of the maximum values for speed, pressure and power.

Intermittent rating

Intermittent max pressure: 300 bar.

This pressure is allowable on the following basis:

a) Up to 50 rpm 15% duty for periods up to 5 minutes maximum.
b) Over 50 rpm 2% duty for periods up to 30 seconds maximum.

Static pressure to DNV rules 405 bar (DNV-GL-RU-Ship Part 4.)

Limits for fire resistant fluids

Fluid Type	Continuous Pressure (bar)	Intermittent Pressure (bar)	Max Speed (rpm)	Model Type
HFA 5/95 oil-in-water emulsion	130	138	50% of limits of mineral oil	All models
HFB 60/40 water-in-oil emulsion	138	172	As for mineral oil	All models
HFC water glycol	103	138	50% of limits of mineral oil	All models
HFD phosphate ester	250	293	As for mineral oil	All models

2-1 Performance Data (cont)

HPC080 Motor (crankcase flushing required)

Displacement Code		97.6	90	85	80	75	70	65	60	55	50
Displacement	cc/rev	1,600	1,475	1,393	1,311	1,229	1,147	1,065	983	901	819
Average actual running torque	Nm/bar	24.1	22.2	20.9	19.7	18.4	17.1	15.9	14.6	13.2	11.9
Average actual mechanical efficiency	%	94.5	94.5	94.3	94.2	94.0	93.8	93.5	93.0	92.2	91.5
Average actual starting torque	Nm/bar	22.0	20.1	18.8	17.6	16.3	15.1	13.9	12.6	11.2	9.9
Average actual starting efficiency	%	86.2	85.7	84.9	84.1	83.4	82.6	81.5	80.1	78.2	75.8
Max continuous speed (F3/FM3)	rpm	270	300	320	340	365	390	420	450	475	500
Max continuous speed (F4/FM4)	rpm	365	400	415	430	445	460	475	490	500	515
Max continuous power (F3/FM3)	kW	165	157	152	147	145	140	134	131	125	120
Max continuous power (F4/FM4)	kW	165	157	152	147	145	140	134	131	125	120
Max continuous pressure	bar	250	250	250	250	250	250	250	250	250	250
Max intermittent pressure	bar	275	275	275	275	275	275	275	275	275	275

Displacement Code		45	40	35	30	25	20	15	10	00
Displacement	cc/rev	737	655	574	492	410	328	246	164	0
Average actual running torque	Nm/bar	10.6	9.3	8.0	6.6	5.3	4.1	2.8	1.6	0
Average actual mechanical efficiency	%	90.4	89.1	87.2	84.8	81.8	77.7	71.0	60.2	0
Average actual starting torque	Nm/bar	8.5	7.2	5.9	4.5	3.3	2.0	0.7	/	0
Average actual starting efficiency	%	72.6	68.7	63.8	57.9	50.8	38.0	17.5	/	0
Max continuous speed (F3/FM3)	rpm	550	600	615	630	630	630	630	630	1,500
Max continuous speed (F4/FM4)	rpm	530	545	560	575	585	600	615	630	1,500
Max continuous power (F3/FM3)	kW	113	105	90	73	59	43	30	14	0
Max continuous power (F4/FM4)	kW	113	105	90	73	59	43	30	14	0
Max continuous pressure	bar	250	250	250	250	250	250	250	250	17
Max intermittent pressure	bar	275	275	275	275	275	275	275	275	17

Data shown is at 207 bar. Intermediate displacements can be made available to special order.

** See page 32: small displacements.*

*** A crankcase flushing flow of 15 l/min is required when freewheeling at 1,500 rpm.*

2-1 Performance Data (cont)

HPC125 Motor (crankcase flushing required)

Displacement Code		125	120	110	100	90	80	70
Displacement	cc/rev	2,048	1,966		1,639	1,475	1,311	1,147
Average actual running torque	Nm/bar	30.8	29.5	27.1	24.5	21.8	19.1	16.5
Average actual mechanical efficiency	%	94.5	94.4	94.3	94.0	93.0	91.7	90.3
Average actual starting torque	Nm/bar	26.4	25.0	22.5	20.0	17.4	14.7	12.0
Average actual starting efficiency	%	810	80.1	78.4	76.6	74.2	70.6	65.4
Max continuous speed (F3/FM3)	rpm	215	225	240	270	300	340	390
Max continuous speed (F4/FM4)	rpm	300	310	340	365	400	430	460
Max continuous power (F3/FM3)	kW	173	173	171	170	157	147	123
Max continuous power (F4/FM4)	kW	202	196	183	171	157	147	123
Max continuous pressure	bar	250	250	250	250	250	250	250
Max intermittent pressure	bar	275	275	275	275	275	275	275

Displacement Code		60	50	40	30	20	10	00
Displacement	cc/rev	983	819	655	492	328	164	0
Average actual running torque	Nm/bar	13.8	11.3	8.8	6.4	4.1	0.8	0
Average actual mechanical efficiency	%	88.5	86.5	84.3	81.6	78.0	30.0	0
Average actual starting torque	Nm/bar	9.1	6.3	3.2	/	/	/	0
Average actual starting efficiency	%	58.1	48.3	30.6	/	/	/	0
Max continuous speed (F3/FM3)	rpm	450	500	600	630	630	630	1,500
Max continuous speed (F4/FM4)	rpm	490	515	545	575	600	630	1,500
Max continuous power (F3/FM3)	kW	101	86	65	48	30	5	0
Max continuous power (F4/FM4)	kW	101	86	65	48	30	5	0
Max continuous pressure	bar	250	250	250	250	250	250	17
Max intermittent pressure	bar	275	275	275	275	275	275	17

Data shown is at 250 bar. Intermediate displacements can be made available to special order.

** See page 32: small displacements.*

*** A crankcase flushing flow of 15 l/min is required when freewheeling at 1,500 rpm.*

2-1 Performance Data (cont)

HPC200 Motor (crankcase flushing required)

Displacement Code		188	180	170	160	150	140	130	120	110	100
Displacement	cc/rev	3,067	2,950	2,790	2,620	2,460	2,290	2,130	1,970	1,800	1,639
Average actual running torque	Nm/bar	47.2	45.2	42.6	40.0	37.3	34.7	32.0	29.4	26.7	24.1
Average actual mechanical efficiency	%	96.3	96.2	96.0	95.8	95.4	95.0	94.5	94.0	93.2	92.5
Average actual starting torque	Nm/bar	42.6	40.6	38.0	35.5	33.0	30.6	28.0	25.5	22.9	20.2
Average actual starting efficiency	%	87.0	86.4	85.7	85.1	84.5	83.8	82.8	81.5	79.8	77.5
Max continuous speed (F3/FM3) rpm		175	180	190	195	200	205	210	225	240	270
Max continuous speed (F4/FM4) rpm		230	235	240	245	250	265	285	310	340	365
Max continuous power	kW	216	213	212	204	195	186	176	173	171	170
Max intermittent power	kW	261	261	261	247	234	222	208	196	183	171
Max continuous pressure	bar	250	250	250	250	250	250	250	250	250	250
Max intermittent pressure	bar	275	275	275	275	275	275	275	275	275	275

Displacement Code		90	80	70	60	50	40	30	20	10	00
Displacement	cc/rev	1,475	1,311	1,150	983	820	655	492	328	164	0
Average actual running torque	Nm/bar	21.5	18.9	16.3	13.8	11.3	8.8	6.4	4.2	1.0	0
Average actual mechanical efficiency	%	91.5	90.5	89.4	88.0	86.3	84.5	82.4	80.0	40.0	0
Average actual starting torque	Nm/bar	17.5	14.8	12.0	9.4	6.0	3.4	/	/	/	0
Average actual starting efficiency	%	74.5	70.7	65.9	60.1	45.7	33.1	/	/	/	0
Max continuous speed (F3/FM3) rpm		300	340	390	450	500	600	630	630	630	1,500
Max continuous speed (F4/FM4) rpm		400	430	460	485	515	545	575	600	630	1,500
Max continuous power	kW	157	147	123	101	86	65	48	30	5	0
Max intermittent power	kW	157	147	123	101	86	65	48	30	5	0
Max continuous pressure	bar	250	250	250	250	250	250	250	250	250	17
Max intermittent pressure	bar	275	275	275	275	275	275	275	275	275	17

Data shown is at 250 bar. Intermediate displacements can be made available to special order.

** See page 32: small displacements.*

*** A crankcase flushing flow of 15 l/min is required when freewheeling at 1,500 rpm.*

2-1 Performance Data (cont)

HPC270 Motor (crankcase flushing required)

Displacement Code		280	250	220	200	180	160	140	120
Displacement	cc/rev	4,588	4,097	3,605	3,277	2,950	2,622	2,294	1,966
Average actual running torque	Nm/bar	70.1	62.3	54.5	49.3	44.3	39.0	33.8	28.6
Average actual mechanical efficiency	%	96.0	95.6	95.2	94.6	94.3	93.5	92.5	91.5
Average actual starting torque	Nm/bar	64.0	56.6	48.9	43.6	38.4	33.2	28.3	23.5
Average actual starting efficiency	%	87.6	86.9	85.2	83.7	81.8	79.7	77.5	75.1
Max continuous speed	rpm	150	160	170	175	210	230	275	310
Max continuous power	kW	278	261	241	225	208	192	174	156
Max continuous pressure	bar	250	250	250	250	250	250	250	250
Max intermittent pressure	bar	275	275	275	275	275	275	275	275

Displacement Code		100	80	60	40	30	20	00
Displacement	cc/rev	1,639	1,311	983	655	492	328	00
Average actual running torque	Nm/bar	23.5	18.4	13.4	8.6	6.3	4.0	0
Average actual mechanical efficiency	%	90.0	88.0	85.5	82.0	80.0	76.0	0
Average actual starting torque	Nm/bar	19.0	14.7	9.1	4.3	1.9	/	0
Average actual starting efficiency	%	72.6	70.2	57.8	40.7	23.5	/	0
Max continuous speed	rpm	375	430	460	490	515	545	1,500
Max continuous power	kW	133	109	85	56	39	21	0
Max continuous pressure	bar	250	250	250	250	250	250	17
Max intermittent pressure	bar	275	275	275	275	275	275	17

Data shown is at 250 bar. Intermediate displacements can be made available to special order.

** See page 32: small displacements.*

*** A crankcase flushing flow of 15 l/min is required when freewheeling at 1,500 rpm.*

2-1 Performance Data (cont)

HPC325 Motor (crankcase flushing required)

Displacement Code		325	310	300	220	200	180	160	140
Displacement	cc/rev	5,326	5,080	4,916	3,605	3,277	2,950	2,622	2,294
Average actual running torque	Nm/bar	81.6	77.8	75.2	54.5	49.3	44.1	38.8	33.6
Average actual mechanical efficiency	%	96.3	96.2	96.1	95.0	94.6	94.0	93.1	92.1
Average actual starting torque	Nm/bar	74.5	71.1	68.7	49.0	43.9	38.8	33.8	28.8
Average actual starting efficiency	%	87.9	87.9	87.8	85.4	84.2	82.8	81.0	78.9
Max continuous speed	rpm	130	135	140	170	190	215	230	275
Max continuous power	kW	278	278	278	241	225	208	192	174
Max continuous pressure	bar	250	250	250	250	250	250	250	250
Max intermittent pressure	bar	275	275	275	275	275	275	275	275

Displacement Code		120	100	95	80	60	40	30	00
Displacement	cc/rev	1,966	1,639	1,557	1,311	983	655	492	0
Average actual running torque	Nm/bar	28.5	23.3	22.0	18.2	13.2	8.5	6.3	0
Average actual mechanical efficiency	%	91.0	89.2	88.8	87.2	84.6	81.6	80.0	0
Average actual starting torque	Nm/bar	24.0	19.3	18.1	14.8	9.0	4.2	1.9	0
Average actual starting efficiency	%	76.5	73.8	73.0	70.7	57.8	40.7	23.5	0
Max continuous speed	rpm	330	370	405	440	460	495	515	1,500
Max continuous power	kW	156	133	127	110	86	48	39	0
Max continuous pressure	bar	250	250	250	250	250	250	250	17
Max intermittent pressure	bar	275	275	275	275	275	275	275	17

Data shown is at 250 bar. Intermediate displacements can be made available to special order.

** See page 32: small displacements.*

*** A crankcase flushing flow of 15 l/min is required when freewheeling at 1,500 rpm.*

2-2 Volumetric Efficiency Data

Motor Type	Geometric Displacement	Zero Speed Constant	Speed Constant	Creep Speed Constant	Crankcase Leakage Constant
HPC	cc/rev	K_1	K_2	K_3	K_4
HPC080	1,639	9.5	45.7	5.8	7.9
HPC125	2,048	6.1	38.5	3	4.25
HPC200	3,087	6.1	38.5	2	4.25
HPC270	4,588	6.5	37.3	1.5	6
HPC325	5,326	6.8	40	1.3	6

Fluid Viscosity	Viscosity Factor
cSt	Kv
20	1.58
25	1.44
30	1.30
40	1.10
50	1.00
60	0.88

Qt (total leakage)	= $[K_1 + n/K_2] \times \Delta P \times Kv \times 0.005$	l/min
Creep speed	= $K_3 \times \Delta P \times Kv \times 0.005$	rpm
Crankcase leakage	= $K_4 \times \Delta P \times Kv \times 0.005$	l/min
ΔP	= differential pressure	bar
n	= speed	rpm

The motor volumetric efficiency can be calculated as follows:

$$\text{Volumetric efficiency (\%)} = \left[\frac{(\text{speed} \times \text{disp.})}{(\text{speed} \times \text{disp.}) + Q_t}\right] \times 100$$

Example:

HPC200 motor with displacement of 3.087 l/rev.

Speed	60 rpm
Differential pressure	200 bar
Fluid viscosity	50 cSt

Total leakage = $(K_1 + n/K_2) \times \Delta P \times Kv \times 0.005$ l/min

= $(6.1+60/38.5) \times 200 \times 1 \times 0.005$

= 7.7 l/min

$$\text{Volumetric efficiency} = \left[\frac{(60 \times 3.087)}{(60 \times 3.087) + 7.7}\right] \times 100$$

= 96%

2-3 Shaft Power Calculation

Example

Firstly, to find the maximum differential pressure ΔP at rated speed:

Select the rated shaft power (W) for the motor from the performance data table (page 24).
This is presented in kilowatts so must be converted to watts (x1000).

Then also take the Actual Average running torque in N.m/bar (T_0) and the rated shaft speed in rpm (n).

$$W = \frac{T_0 \cdot \Delta P \cdot 2\pi \cdot n}{60}$$

Or to find maximum ΔP then use:

$$\Delta P = \frac{60 \cdot W}{2\pi \cdot T_0 \cdot n}$$

HPC270 example - with a displacement code of 140:

Rated shaft power (W):	174,000
Average actual running torque (Nm/bar):	28.3
Rated shaft speed (rpm):	275

$$\Delta P = \frac{60 \times 189{,}000}{2\pi \times 69.4 \times 150}$$

ΔP= 213 bar (max.)

Secondly, to find the maximum speed at rated pressure:

$$n = \frac{60 \cdot W}{2\pi \cdot T_0 \cdot \Delta P}$$

Rated shaft power (W):	174,000
Average actual running torque (Nm/bar):	28.3
Rated pressure (bar):	250

$$n = \frac{60 \times 174{,}000}{2\pi \times 28.3 \times 250}$$

n=235 rpm (max.)

In summary, operating the motor within its shaft power limit, at rated speed, would give a maximum pressure of 213 bar, and operating the motor at rated pressure, would give a maximum speed of 235 rpm.

Notes:

1) The maximum calculated speed is based on a rated inlet pressure of 250 bar.
2) The maximum shaft power is only allowable if the motor drain temperature remains below 80°C.
3) The maximum calculated differential pressure assumes that the low pressure motor port is less than 30 bar.

2-4 Functional Symbols

Example model code:

HPC*/P/***/**/FM3/X/...**

X - external pilot supply to 'X' and 'Y' ports

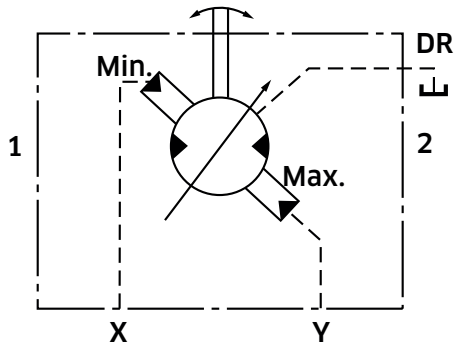

Example model code:

HPC*/P/***/**/FM3/C/...**

C - single external supply to PC port

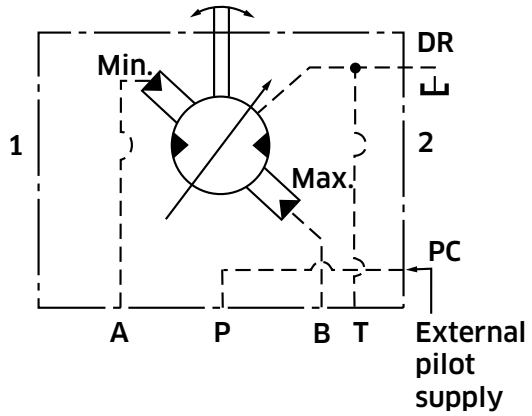

Example model code:

HPC*/P/***/**/FM3/CS/...**

CS - internally shuttled pilot supply

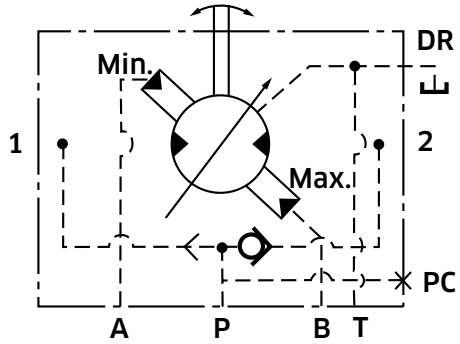

Example model code:

HPC*/P/***/**/FM3/C1/...**

C1 - internal pilot supply from port 1 for clockwise rotation only

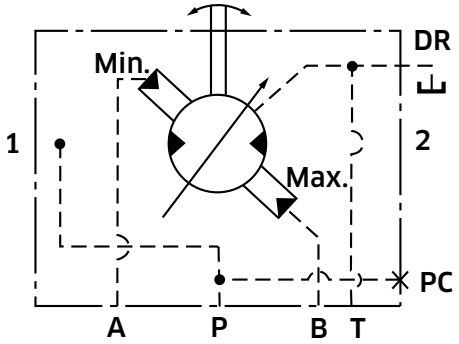

There is a single port (PC) in the 'C' spacer.

Pressure ports in FM3 & FM4 valve housings can be called up as special features when required.

2-5 Stress Limits

When applying large external radial loads, consideration should also be given to motor bearing lives (see page 33).

Motor Frame Size	Maximum External Radial Bending Moment [kNm]
HPC080	4,500
HPC125	6,500
HPC200	6,750
HPHDC200	12,200
HPC270	8,250
HPHDC270	16,000
HMC325	8,250

Example:

Determine the maximum radial shaft load of a HPC080 motor:

Radial load offset, A = 100 mm
Maximum radial load, W = 4,500 (see table)/100
= 45kN (4,587 kg)

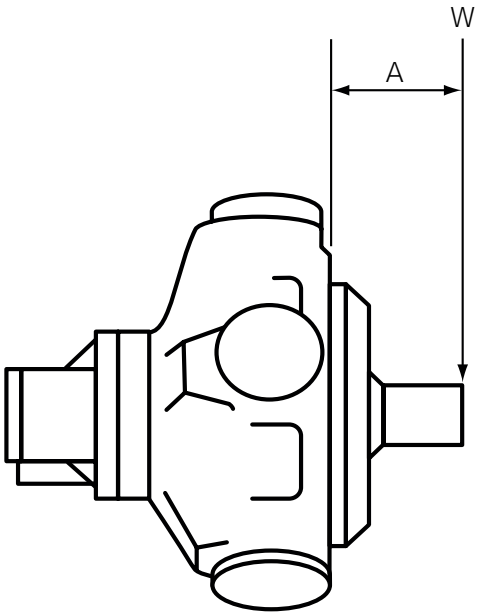

A = Distance from mounting face to load centre (mm)

W = Side load (N)

[Note}
The offset distance A is assumed to be greater than 50 mm. Contact KPM UK if this is not the case.

2-6 Bearing Life Notes

Consideration should be given to the required motor bearing life in terms of baring service life. The factors that will determine bearing life include:

1) Duty cycle - time spent on and off load

2) Speed

3) Differential pressure

4) Fluid viscosity

5) External radial shaft load

6) External axial shaft load

2-7 Circuit and Application Notes

Limits for fire resistant fluids

To select either displacement, a pressure at least equal to 67% of the motor inlet/outlet pressure (whichever is higher) is required. In most applications the motor inlet pressure will be used. If the inlet/outlet pressure is below 3.5 bar, a minimum control pressure of 3.5 bar is required. In the event of loss of control pressure the motor will shift to its highest displacement.

Starting torque

Refer to performance data, (see pages 7 to 13).

Low speed operation

The minimum operating speed is determined by load inertia, drive elasticity, motor displacement and system internal leakage. If the application speed is below 3 rpm, then consult KPM UK.

If possible, always start the motor in high displacement.

Small displacements

The pressures given in the tables on pages 22 to 28 for displacement code "00" are based on 1,000 rpm output shaft speed. This pressure can be increased for shaft speeds less than 1,000 rpm; consult KPM UK for details. Speeds greater than 1,000 rpm may be applied but only after the machine duty cycle has been considered in conjunction with KPM UK. A zero swept volume displacement (for freewheeling requirements) is available on request, consult KPM UK.

High back pressure

When both inlet and outlet ports are pressurised continuously, the lower pressure port must not exceed **70 bar** at any time. Note that high back pressure reduces the effective torque output of the motor.

Boost pressure

When operating as a motor the outlet pressure should equal or exceed the crankcase pressure. If pumping occurs (i.e. overrunning loads) then a positive pressure, "P", is required at the motor ports. Calculate "P" (bar) from the operating formula Boost Formula

$$P = 1 + \frac{N^2 \times V^2}{K} + C$$

Where P is in bar, N = motor speed (rpm), V = motor displacement (cc/rev), C = Crankcase pressure (bar) and K=a constant from the table below:

Motor	Porting	Constant (K)
HPC080	F(M)3	1.6×10^{10}
	F(M)4	3.3×10^{10}
HPC125	F(M)3	1.6×10^{10}
HPC200	F(M)3	1.6×10^{10}
	F(M)4	3.3×10^{10}
HPC270	F(M)4	4.0×10^{10}
HPC325	F(M)4	4.0×10^{10}

2-7 Circuit and Application Notes (cont)

The flow rate of oil for the make-up system can be estimated from the crankcase leakage data (see page 29) plus an allowance for changing displacement:

e.g.

HPC080	To change high to low in 0.25 sec requires 32 L/min
HPC125	To change high to low in 0.5 sec requires 15 L/min
HPC200	To change high to low in 0.5 sec requires 15 L/min
HPC270	To change high to low in 1 sec requires 24 L/min
HPC325	To change high to low in 1 sec requires 20 L/min

Allowances should be made for other systems losses and also for "fair wear and tear" during the life of the motor, pump and system components.

Motorcase pressure

The motorcase pressure should not continuously exceed 3.5 bar with a standard shaft seal fitted. On installations with long drain lines a relief valve is recommended to prevent over-pressurising the seal.

Notes

1) The motorcase pressure at all times must not exceed either the motor inlet or outlet pressure.

2) High pressure shaft seals are available to special order for casing pressures of: 10 bar continuous and 15 bar intermittent.

3) Check installation dimensions (pages 27 to 67) for maximum crankcase drain fitting depth.

Hydraulic Fluids

Dependent on motor (see model code fluid type - page 4) suitable fluids include:

a) Antiwear hydraulic oils

b) Phosphate ester (HFD fluids)

c) Water glycols (HFC fluids)

d) 60/40% water-in-oil emulsions (HFB fluids)

e) 5/95% oil-in-water emulsions (HFA fluids)

Reduce pressure and speed limits, as per table on page 21.

Viscosity limits when using any fluid except oil-in-water (5/95) emulsions are:

Max. off load:	**2,000 cSt** (9270 SUS)
Max. on load:	**150 cSt** (695 SUS)
Optimum:	**50 cSt** (232 SUS)
Minimum:	**25 cSt** (119 SUS)

Mineral oil recommendations

The fluid should be a good hydraulic grade, non-detergent Mineral Oil. It should contain anti-oxidant, antifoam and demulsifying additives. It must contain antiwear or EP additives. Automatic transmission fluids and motor oils are not recommended.

Biodegradable Fluid Recommendations

Well-designed environmentally acceptable lubricants (EALs) may be used with Staffa motors. The EAL must be designed for use in hydraulic systems and have a synthetic ester base. Additives should be as listed for mineral oils, above. The performance of EALs with hydraulic systems vary widely and so checks for seal compatibility, copper alloy compatibility, oxidation resistance and lubrication properties should be carried out before selecting an EAL. For help with EALs please contact KPMUK.

2-7 Circuit and Application Notes (cont)

Temperature limits

Ambient min.	-30°C (-22°F)
Ambient max.	+70°C (158°F)

Max. operating temperature range.

	Mineral oil	**Water containing**
Min	-20°C (-4°F)	+10°C (50°F)
Max.	+80°C (175°F)	+54°C (130°F)

Note: To obtain optimum services life from both fluid and hydraulic systems components, a fluid operating temperature of 40°C is recommended.

Filtration

Full flow filtration (open circuit), or full boost flow filtration (close circuit) to ensure system cleanliness to ISO4406/1986 code 18/14 or cleaner.

Noise levels

The airborne noise level is less than 66.7 dB(A) DIN & dB(A) NFPA through the "continuous" operating envelope. Where noise is a critical factor, installation resonances can be reduced by isolating the motor by elastomeric means from the structure and the return line installation. Potential return line resonances originating from liquid borne noise can be further attenuated by providing a return line back pressure of 2 to 5 bar.

Polar moment of intertia and mass table

Motor Frame Size	Displacement code	Polar Moment of Intertia (kg.m2) (Typical data)
HPC080	90	0.0520
	45	0.0440
HPC125	125	0.2000
	50	0.1400
HPC200	188	0.2300
	75	0.1800
HPC270	280	0.4900
	100	0.4700
HPC325	325	0.5000
	100	0.4700

Mass

HPC080 Approx. all models 172 kg.
HPC125 Approx. all models 235 kg.
HPC200 Approx. all models 282 kg.
HPC270 Approx. all models 450 kg.
HPC325 Approx. all models 460 kg.

2-8 Crankcase Flushing Flow

In order to achieve the maximum shaft power, a crankcase flushing flow of 15 l/min should be directed through the motorcase. To improve the cooling effect of flushing flow, the distance between the inlet and outlet drain port connections should be maximised. If a flushing flow is not used, please consult KPM UK to verify performance parameters.

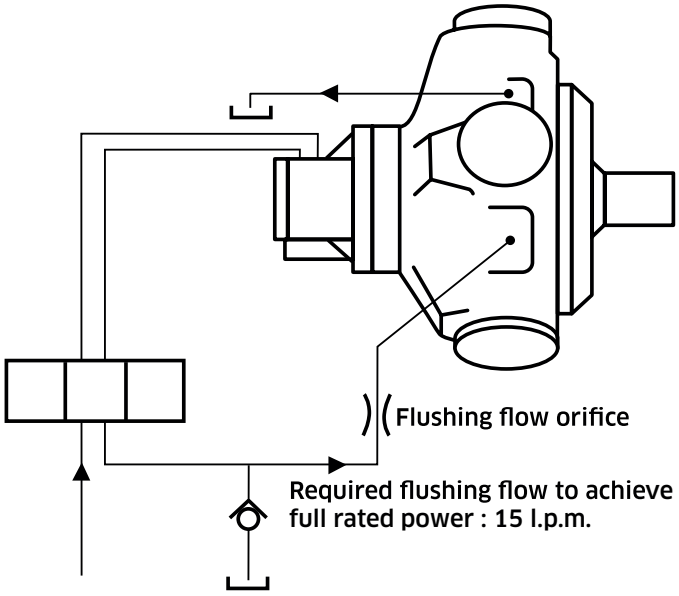

Check valve pressure (bar) *	Orifice diameter (mm)
3	4.4
4	4.1
5	3.9
6	3.7
7	3.6
8	3.5
9	3.4
10	3.3

* This assumes that the crankcase pressure is zero, if not then the check valve pressure will need to be increased to maintain the pressure drop across the orifice.

Note:
If due to crankcase flushing flow, the crankcase pressure continuously exceeds 3.5 bar, then the motor build should include a high pressure shaft seal.

2-9 Motor Operation at Low Temperature

When operating the motor at low temperature consideration should be given to the fluid viscosity. The maximum fluid viscosity before the shaft should be turned is 2,000 cSt. The maximum fluid viscosity before load is applied to the motor shaft is 150 cSt.

If low ambient temperature conditions exist, then a crankcase flushing flow of at least 5 l/min should be applied to the motor during periods when the motor is not in use.

The shaft seal temperature limits for both medium and high pressure applications are shown in the table below.

	Non-operating temperature limits	Minimum operating temperature
Standard pressure shaft seal	below minus 40°C and above 100°C	minus 30°C
High pressure shaft seal	below minus 30°C and above 120°C	minus 15°C

All seals are very brittle below minus 40°C and are likely to break very easily and due to their sluggish response may not provide a 100% leak free condition.

It should be noted that the maximum continuous operating temperature within the motor crankcase is plus 80°C.

2-10 Crankcase Drain Connections

Motor axis - horizontal

The recommended minimum pipe size for drain line lengths up to approx. 5m is 12.0 mm (½") bore. Longer drain lines should have their bore size increased to keep the crankcase pressure within limits.

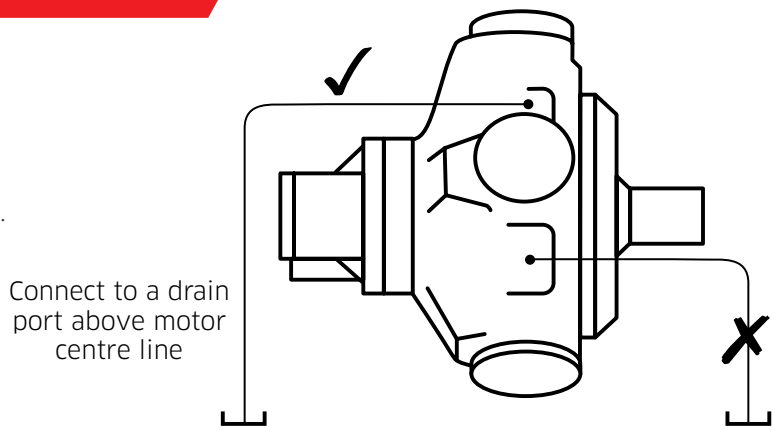

Motor axis - vertical shaft up

Specify "V" within the model code for extra drain port, G¼" (BSPF). Connect this port into the main drain line downstream of a 0.35 bar check valve to ensure good bearing lubrication. The piping arrangement must not allow syphoning from the motorcase. (refer to installation drawing for details).

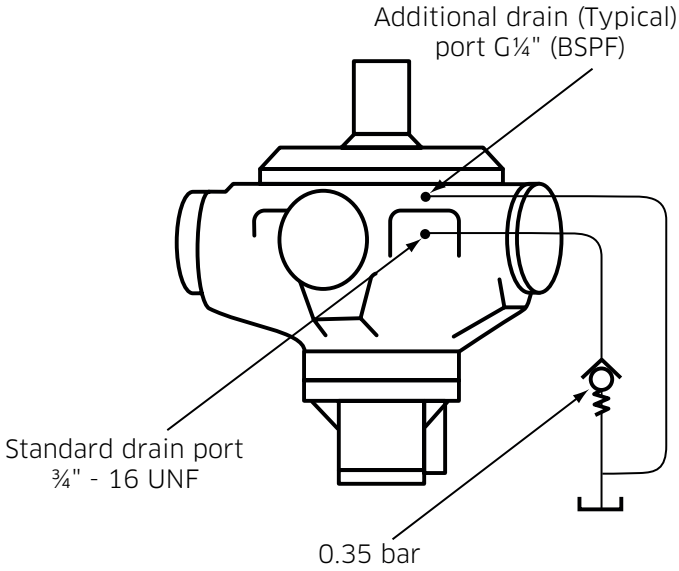

Motor axis - vertical shaft down

The piping, from any drain port, must be taken above the level of the motorcase to ensure good bearing lubrication. The arrangement must not allow syphoning from the motorcase.

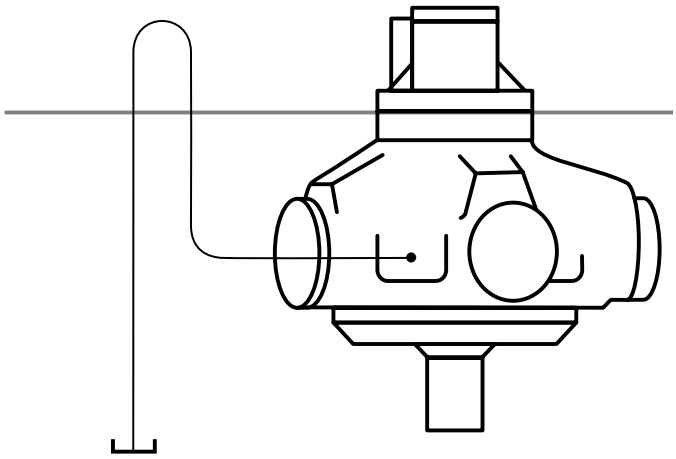

2-11 Freewheeling Notes

All Staffa motors can be used in freewheeling applications. In all circumstances it is essential that the motor is unloaded ("A" and "B" ports connected together) and that the circuit is boosted. The required boost pressure is dependent on both the speed and displacement conditions of the motor determined by the maximum overrunning load condition (see boost pressure calculation method on page 32)

It should be noted that for "B" motors large flows will re-circulate around the motor. This will require a large recirculating valve and consideration of circuit cooling as the motor will be generating a braking torque. It is for these reasons that "C" series motors are the preferred option for freewheeling applications. It is normal to select displacement codes 00, 05 or 10.

Selecting the lowest zero displacement option (00) will allow the motor shaft to be rotated at high speed without pumping fluid and with a minimum boost and drive torque requirement. Consideration must also be given when freewheeling that the load does not drive the motor above its rated freewheeling speed condition. (see pages 22 to 26).

Displacement selection

Under all operating conditions the control pressure port should be at least 67% of the motor inlet/outlet pressure whichever is the higher.

A minimum control pressure at the low displacement selection port of 3.5 bar is necessary to ensure that the motor remains in its minimum displacement condition. A separate pressure supply may be necessary to ensure this condition is always maintained. It should be noted that with the loss of control pressure, the motor will shift to its high displacement condition, which could result in damage to the motor.

Boost requirement

The minimum required boost pressure as noted above can be ascertained utilising the calculation method shown on page 19. The maximum motor and control pressure at 100 rpm is 17 bar and must not be exceeded since higher pressures will increase motor losses at the conrod slipper interface and valve assembly and thereby will significantly increase the motor operating temperature.

The boost flow required should be sufficient to make-up circuit leakage loss and provide cooling for recirculating flow pressure drop.

Crankcase cooling

A crankcase flushing flow of up to 15 l/min can be used to control and reduce the temperature rise of the motor during the freewheel operation.

This should not be necessary for speeds below 1,000 rpm.

For speeds above this up to 1,500 rpm then crankcase flushing flow must be used.

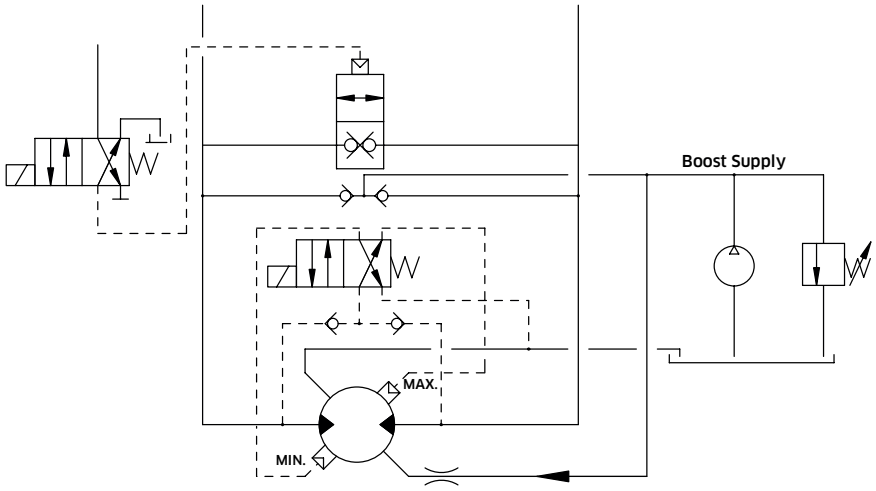

2-12 Installation Data

General

Spigot

The motor should be located by the mounting spigot on a flat, robust surface using correctly sized bolts.
The diametrical clearance between the motor spigot and the mounting must not exceed 0.15 mm. If the application incurs shock loading, frequent reversing or high speed running, then high tensile bolts should be used, including one fitted bolt.

Bolt Torque

The recommended torque wrench setting for bolts is as follows:

M18	312 +/_ 7 Nm
⅝" UNF	265 +/_ 14 Nm
M20	407 +/_ 14 Nm
¾" UNF	393 +/_ 14 Nm

Shaft coupling:

Where the motor is solidly coupled to a shaft having independent bearings the shaft must be aligned to within 0.13 mm TIR.

Motor axis - horizontal

The crankcase drain must be taken from a position above the horizontal centre line of the motor, (refer to installation drawing for details).

Motor axis - vertical shaft up

The recommended minimum pipe size for drain line lengths up to approx. 5 m is 12.0 mm as an internal diameter. If using longer drain lines, then increase the pipe internal bore diameter to keep the motorcase pressure within specified limits.

Specify "V" in the model code for extra drain port, G¼" (BSPF). Connect this port into main drain line downstream of a 0.35 bar check valve.

Motor axis - vertical shaft down

Piping (from any drain port) must be taken above level of motorcase.

Bearing lubrication - piping

The installation arrangement must not allow syphoning from the motorcase. Where this arrangement is not practical, please consult KPM UK.

Any of the drain port positions can be used, but the drain line should be run above the level of the uppermost bearing and if there is risk of syphoning then a syphon breaker should be fitted.

Start - up

Fill the crankcase with system fluid. Where practical, a short period (30 minutes) of "running in" should be carried out with the motor unloaded and set to its high displacement.

3 Dimensions

Conversion Table

Pressure	
bar	PSI
1	14.5
Flow	
l/min	gal/min
1	0.264 US
1	0.219 UK
Length	
mm	inch
25.4	1

Torque	
Nm	lbf ft
1	1.737
Power	
kW	hp
1	1.341
Mass	
kg	lb
1	2.2

3-1 HPC080

'P', 'S' & 'Z' Shafts

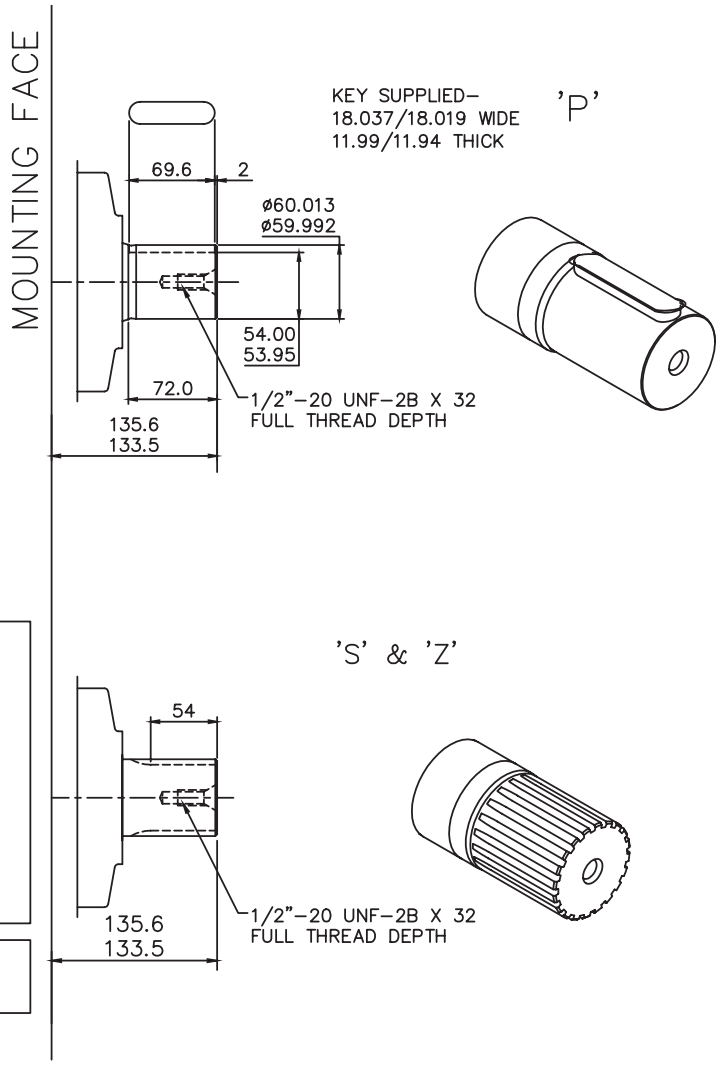

SPLINE DATA

'S'
TO BS 3550 (ANSI B92.1 CLASS 5)
FLAT ROOT SIDE FIT, CLASS 1

PRESSURE ANGLE	30°
NUMBER OF TEETH	14
PITCH	6/12
MAJOR DIAMETER	62.553/62.425
FORM DIAMETER	55.052
MINOR DIAMETER	54.084/53.525
PIN DIAMETER	8.128
DIAMETER OVER PINS	71.593/71.544

'Z'
DIN 5480 W70 x 3 x 30 x 22 x 7h

3-1 HPC080 (cont)

'T' Shaft

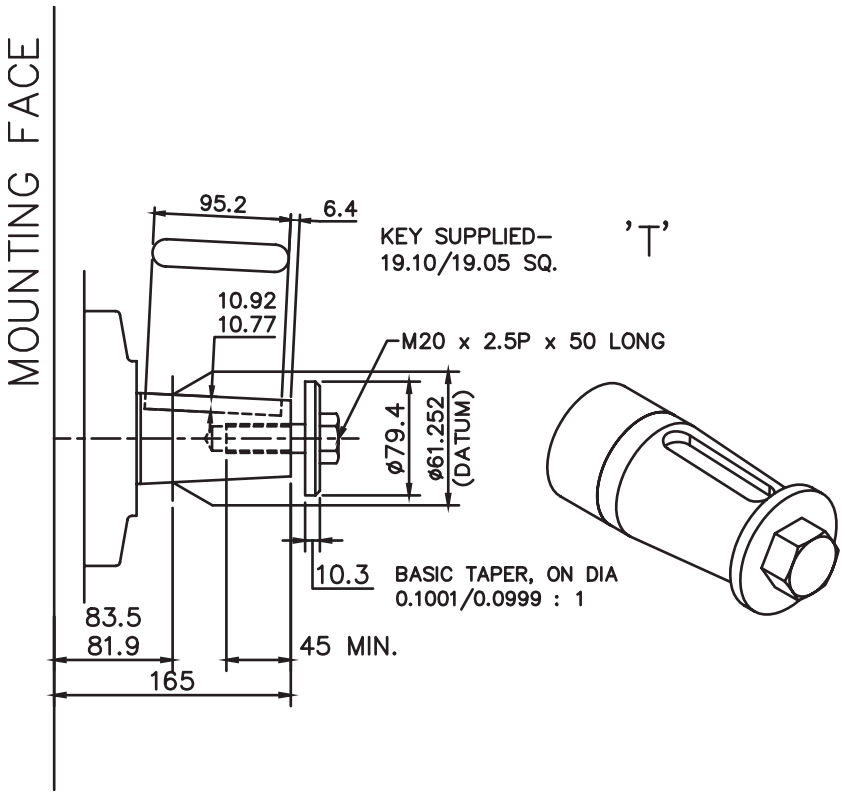

3-1 HPC080 (cont)

'F3' & 'FM3' Valve Housings

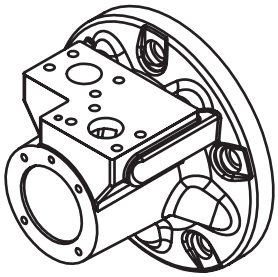

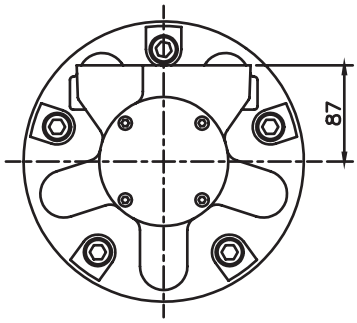

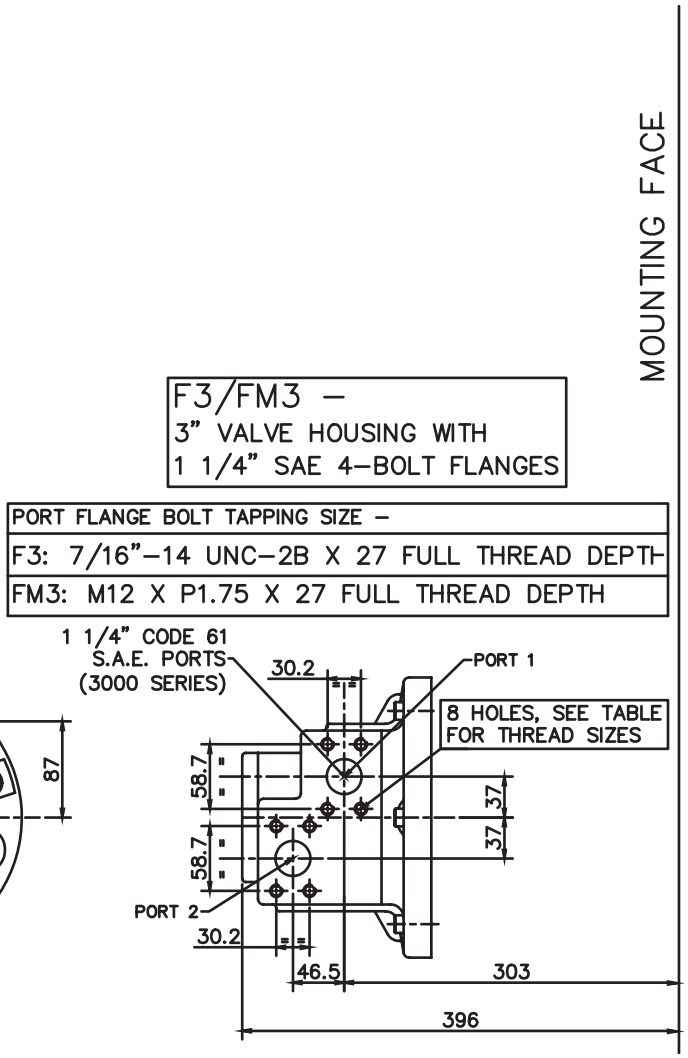

3-1 HPC080 (cont)

'F4' & 'FM4' Valve Housings

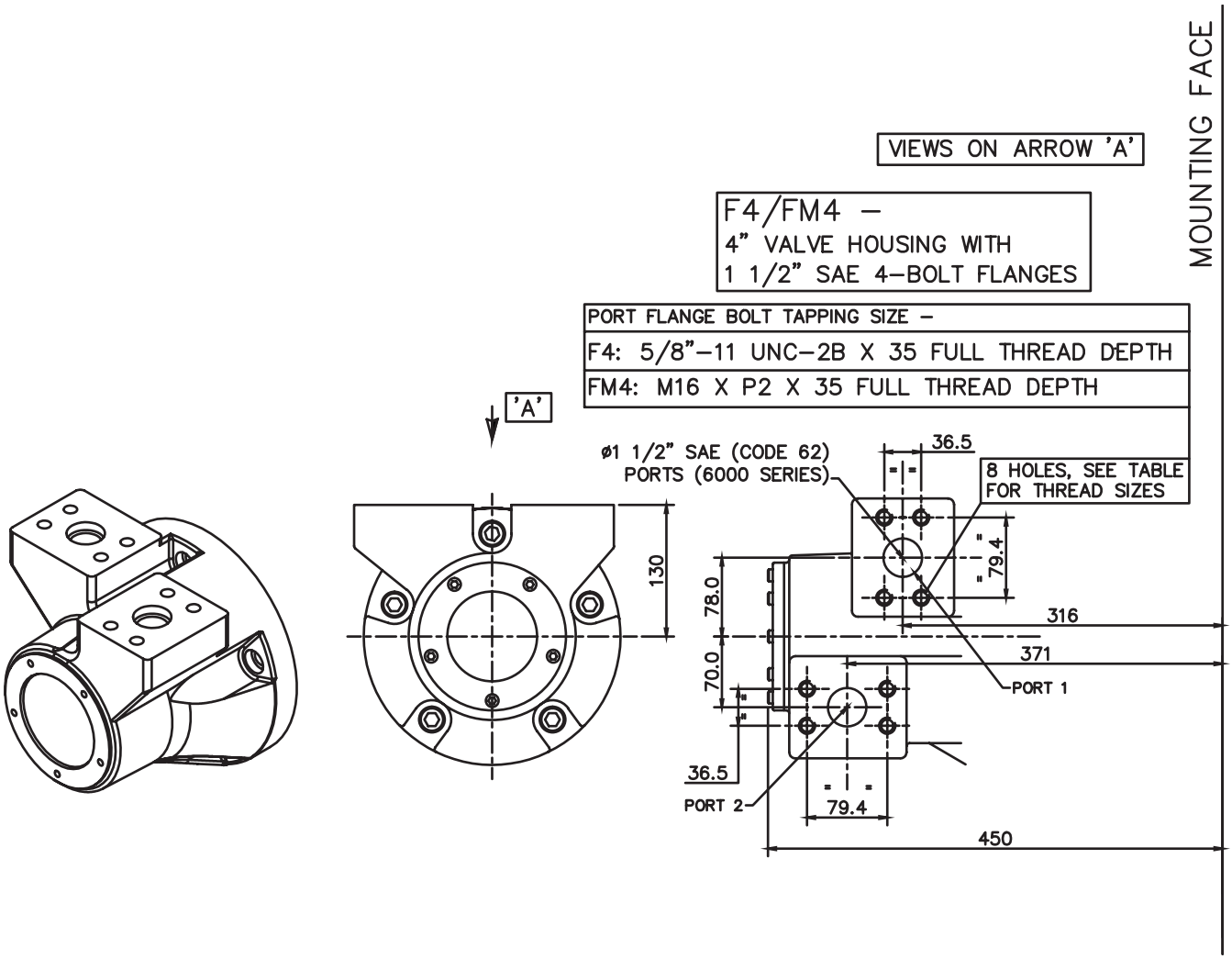

3-1 HPC080 (cont)

'C', 'CS' & 'X' C Spacers

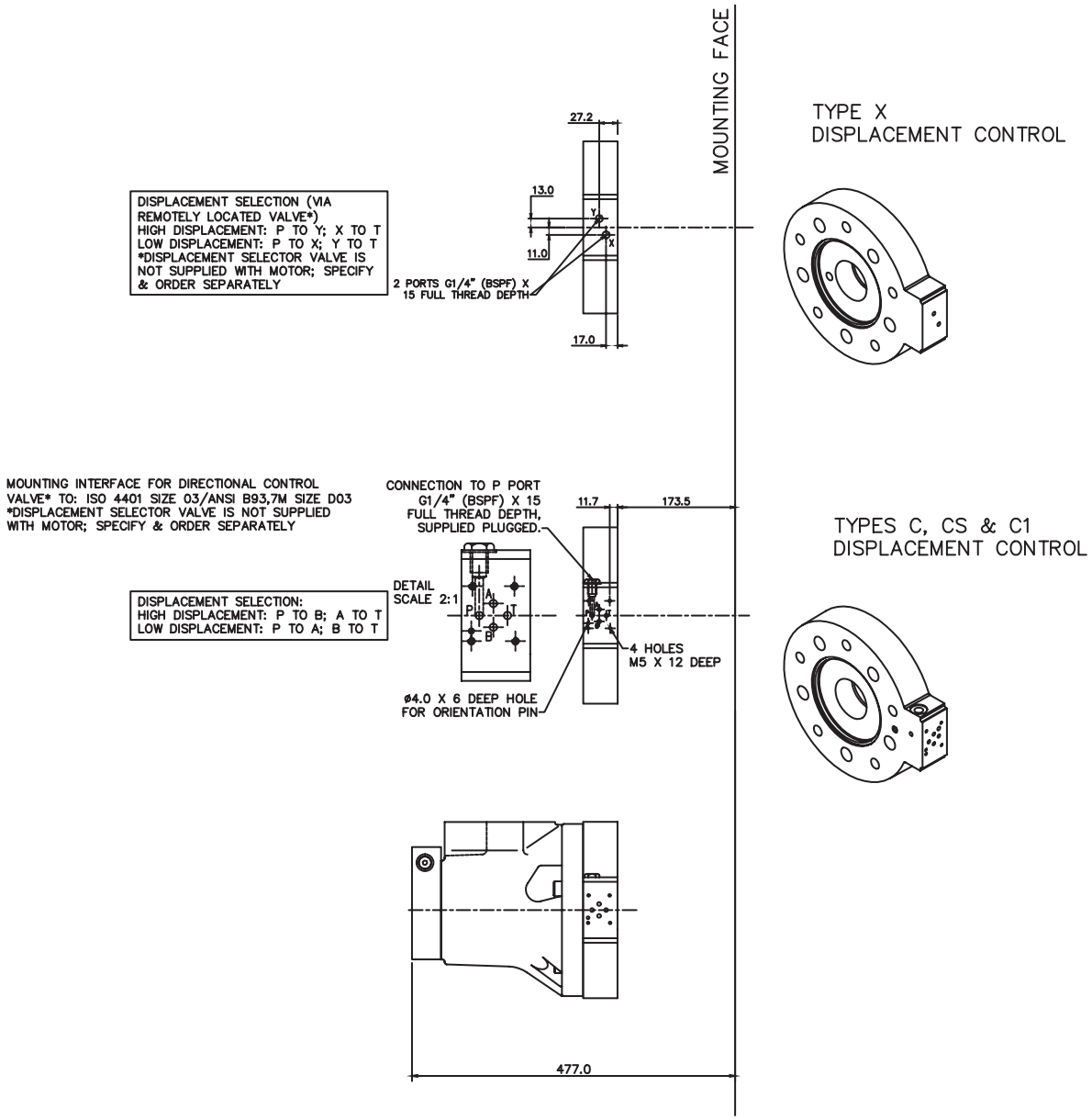

3-1 HPC080 (cont)

Installation

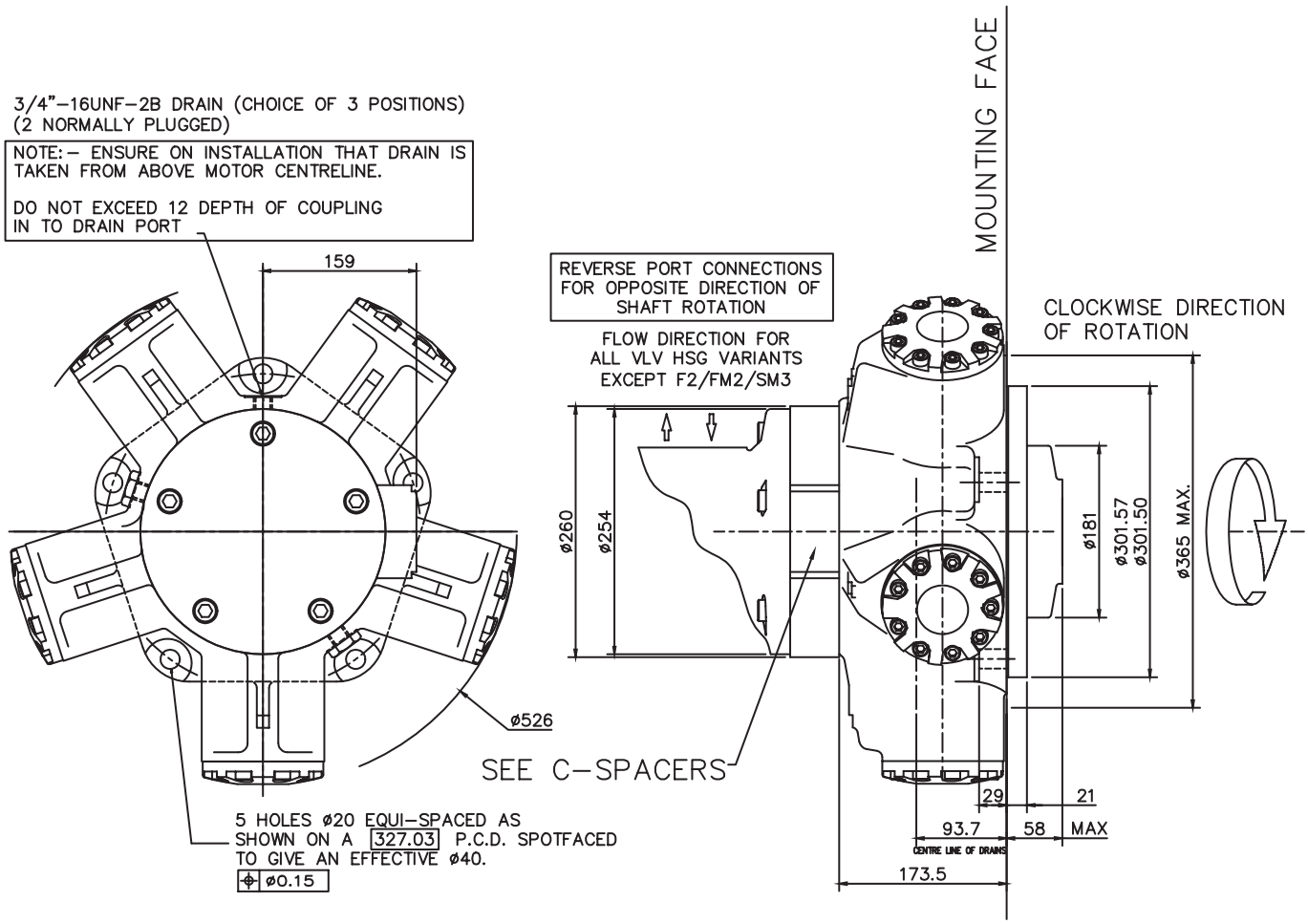

3-2 HPC125

'P1', 'S3' & 'Z3' Shafts

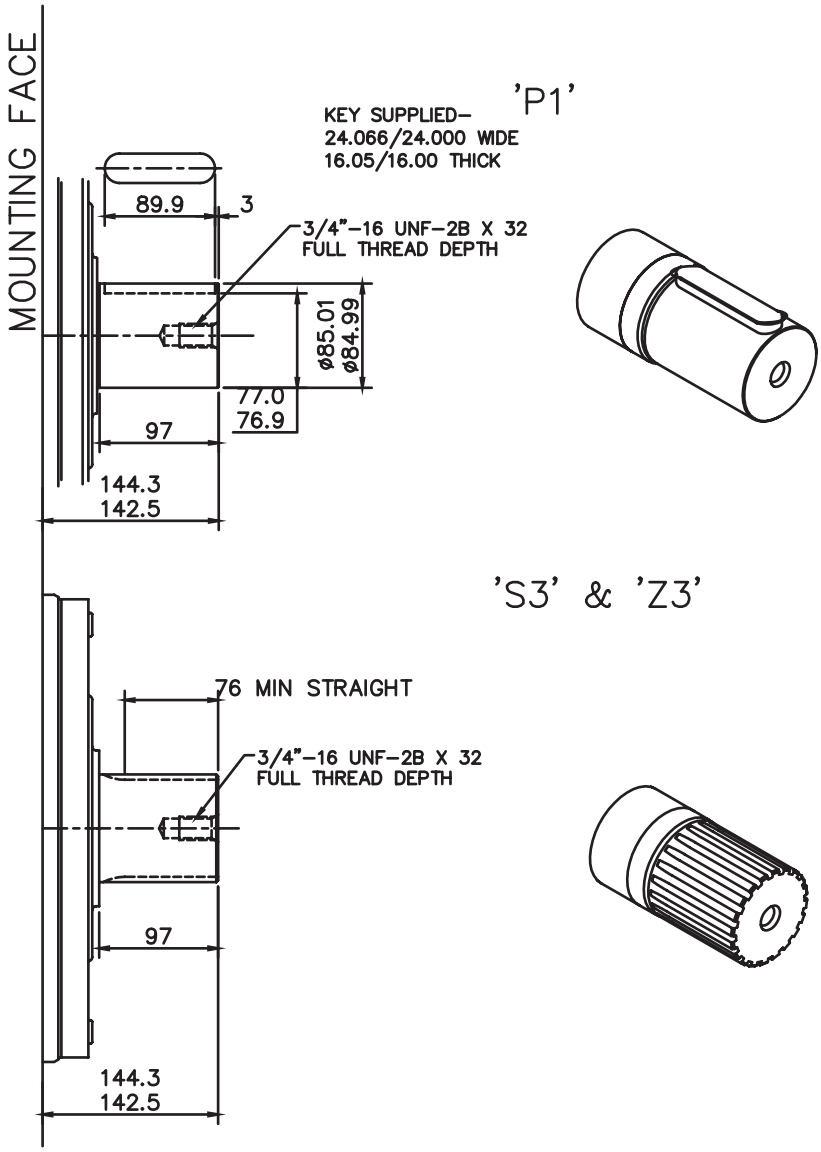

SPLINE DATA

'S'	
TO BS 3550 (ANSI B92.1, CLASS 5)	
FLAT ROOT SIDE FIT, CLASS 1	
PRESSURE ANGLE	30°
NUMBER OF TEETH	20
PITCH	6/12
MAJOR DIAMETER	87.953/87.825
FORM DIAMETER	80.264
MINOR DIAMETER	79.485/78.925
PIN DIAMETER	8.128
DIAMETER OVER PINS	97.084/97.030

'Z'
DIN 5480 W85 x 3 x 27 x 7h

3-2 HPC125 (cont)

'T' Shaft

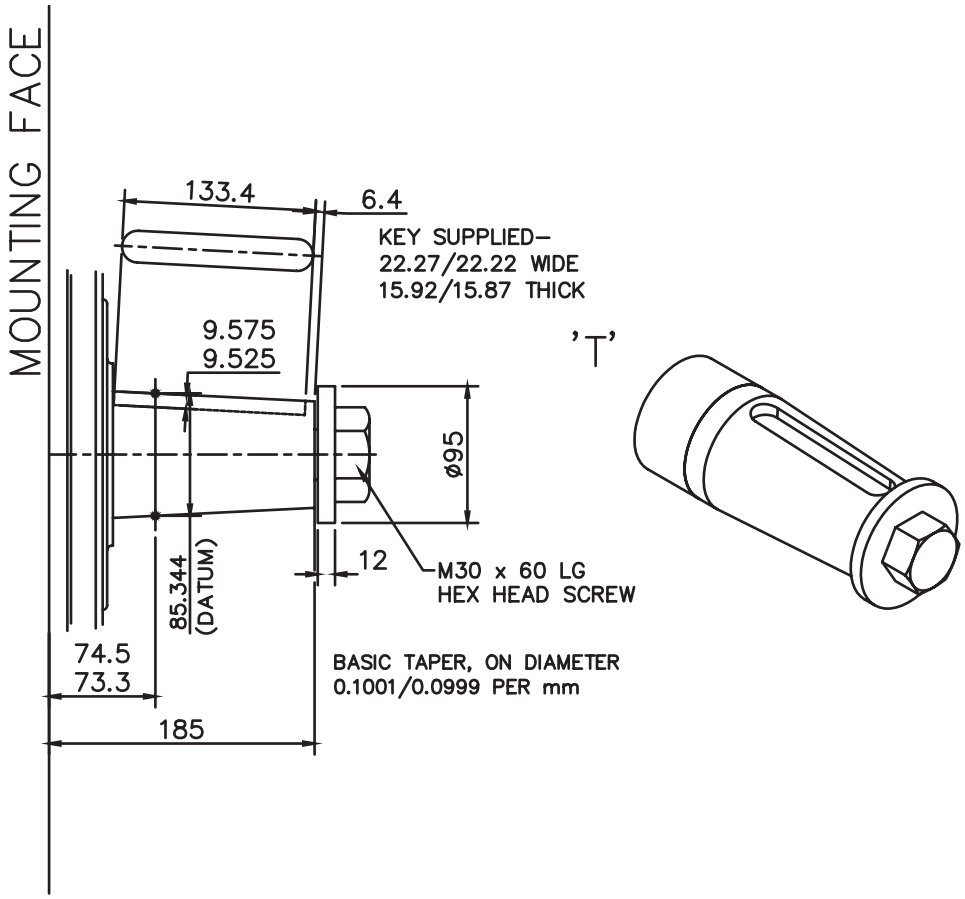

3-2 HPC125 (cont)

'F3' & 'FM3' Valve Housings

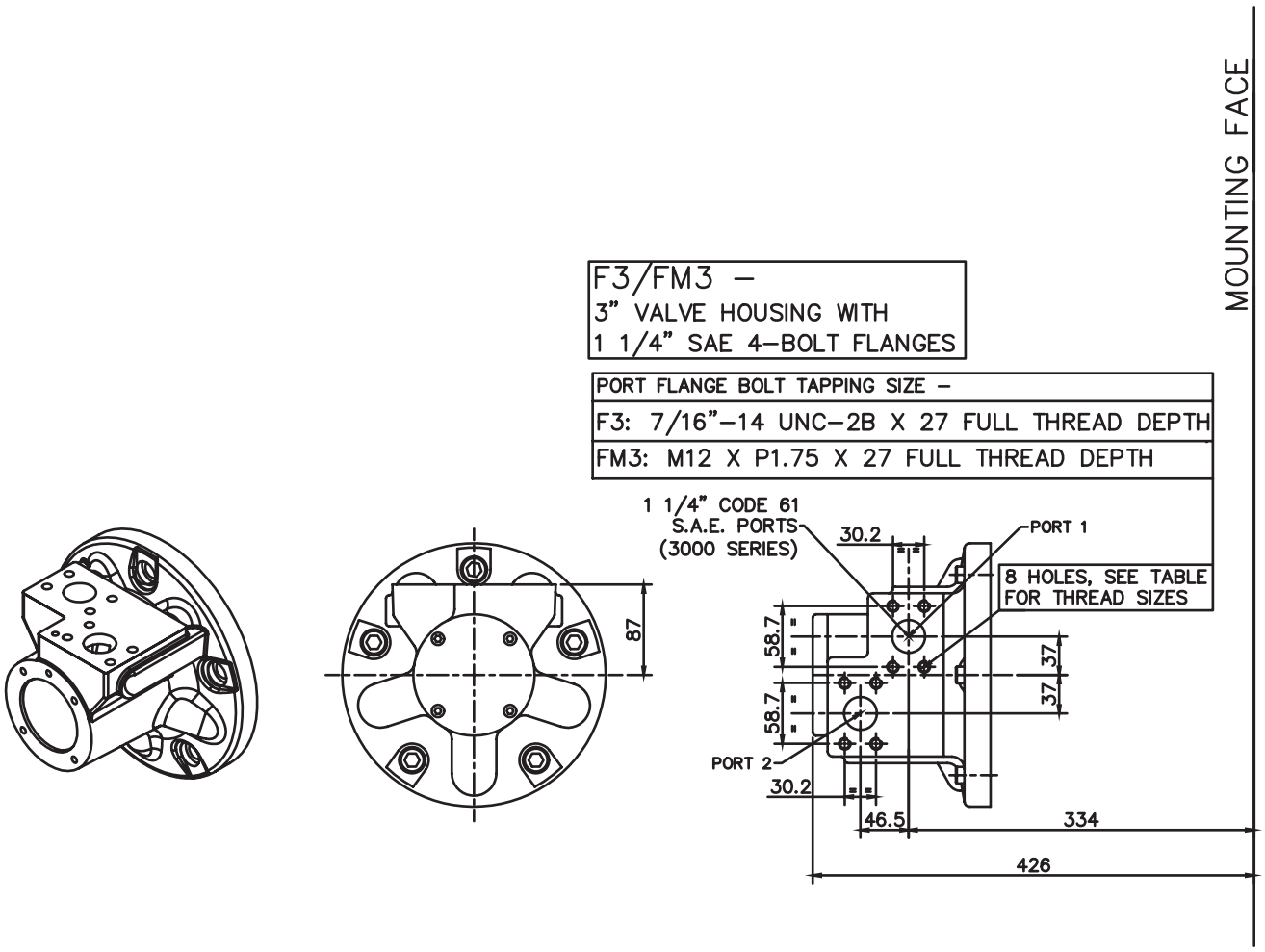

3-2 HPC125 (cont)

'F4' & 'FM4' Valve Housings

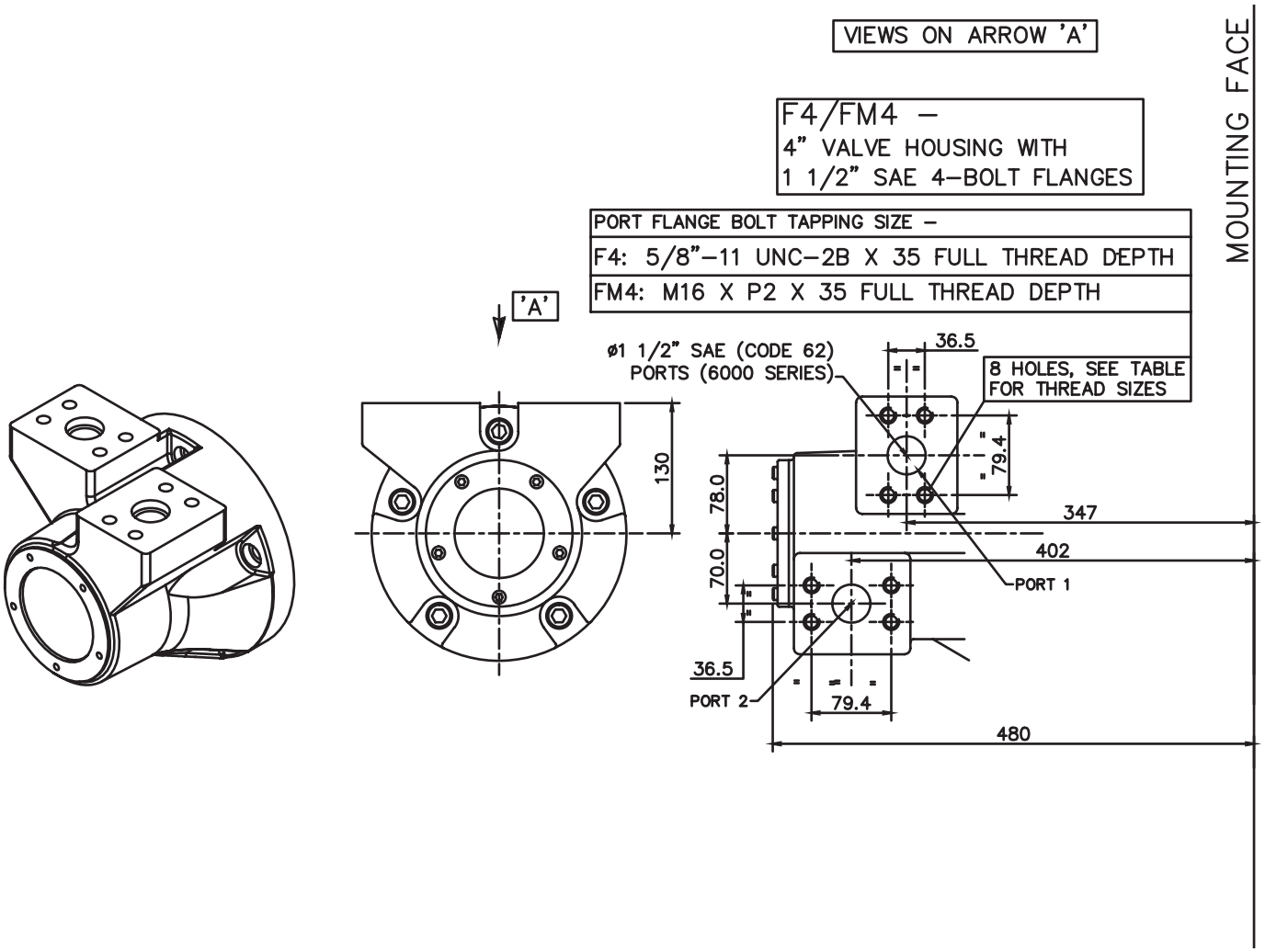

3-2 HPC125 (cont)

'C', 'CS' & 'X' C Spacers

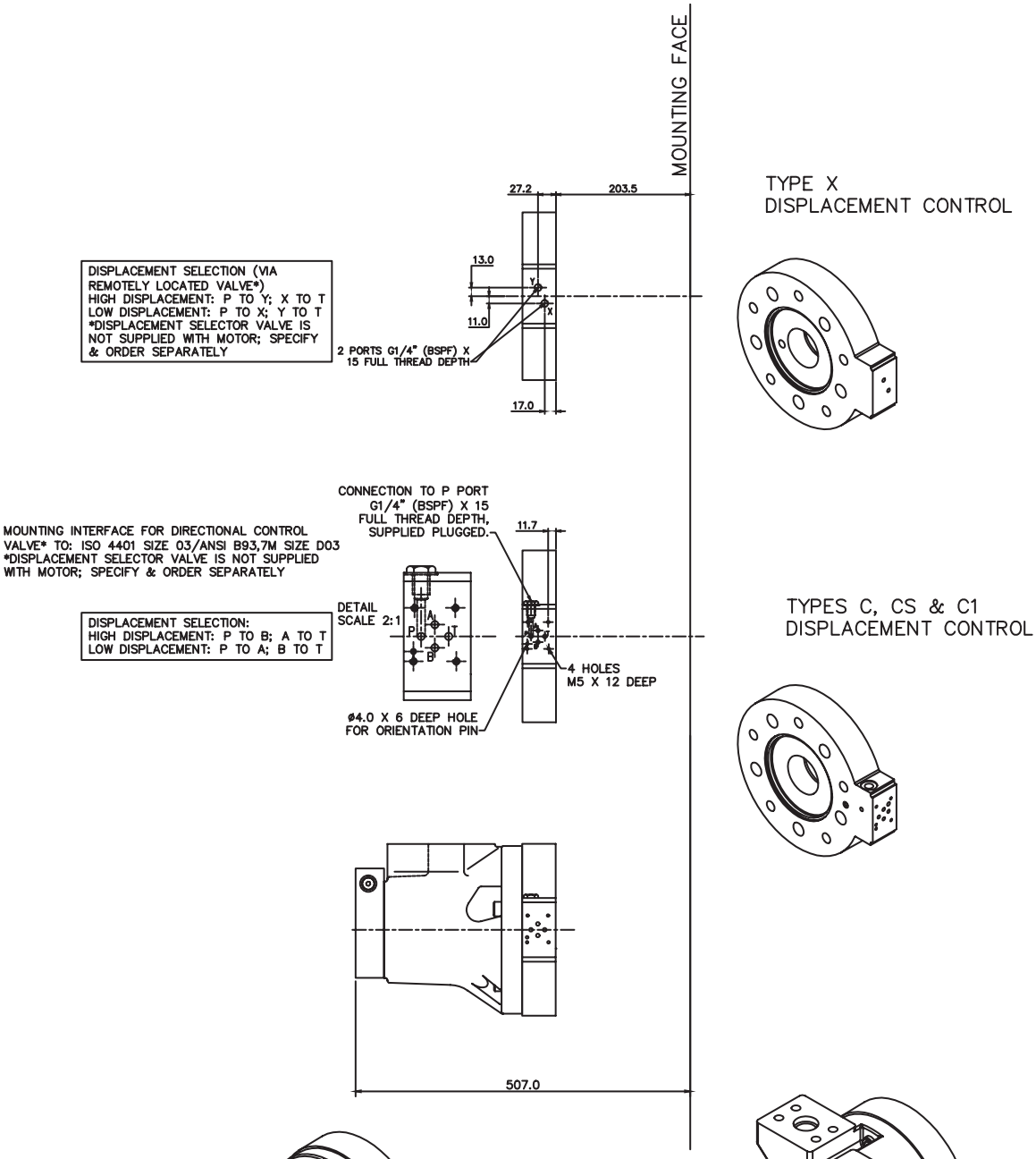

3-2 HPC125 (cont)

Installation

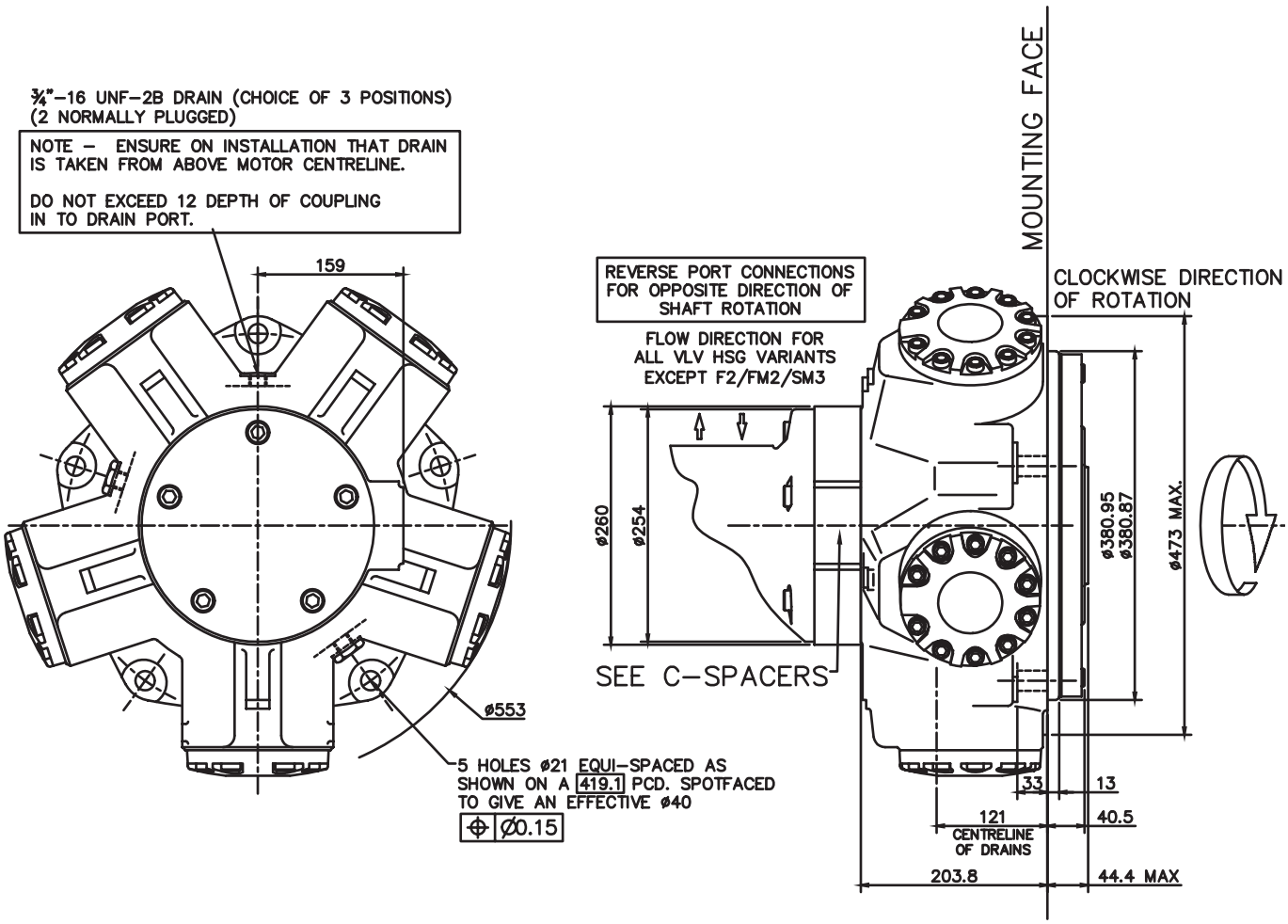

3-3 HPC200

'P1', 'S3' & 'Z3' Shafts

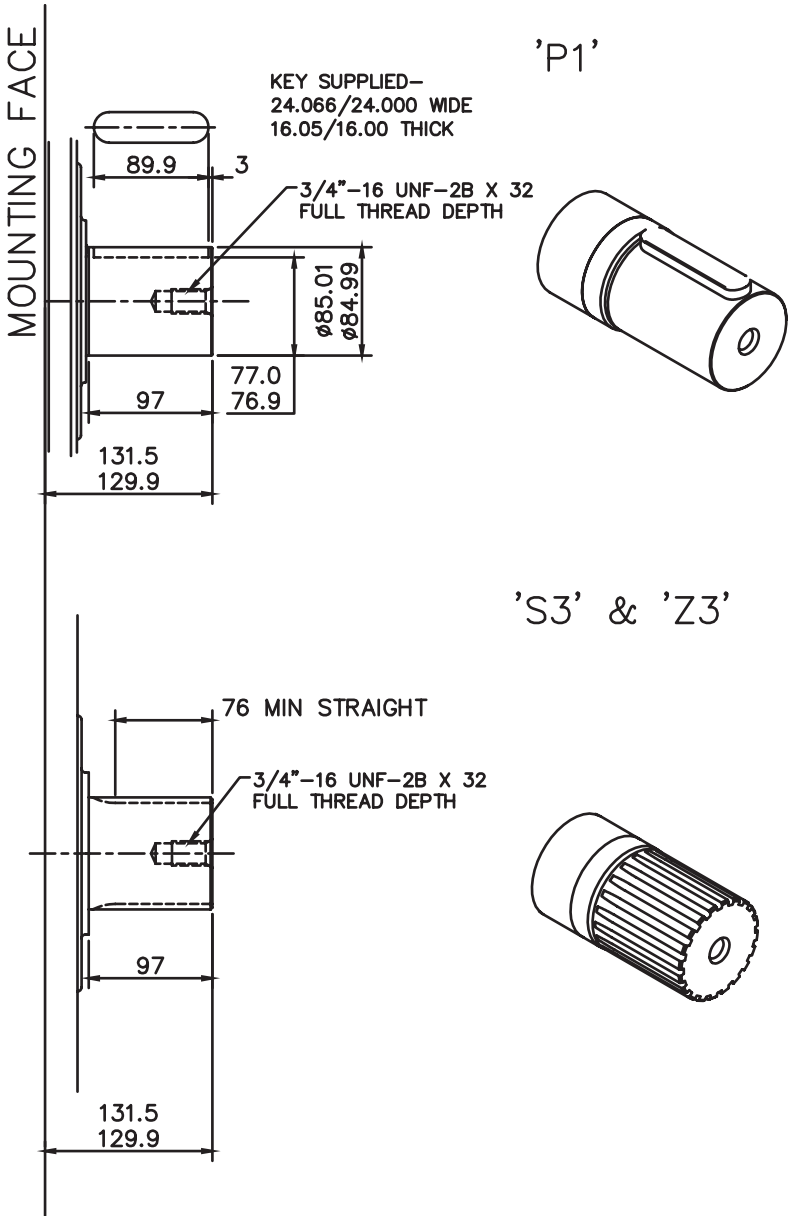

SPLINE DATA

'S'	
TO BS 3550 (ANSI B92.1, CLASS 5)	
FLAT ROOT SIDE FIT, CLASS 1	
PRESSURE ANGLE	30°
NUMBER OF TEETH	20
PITCH	6/12
MAJOR DIAMETER	87.953/87.825
FORM DIAMETER	80.264
MINOR DIAMETER	79.485/78.925
PIN DIAMETER	8.128
DIAMETER OVER PINS	97.084/97.030

'Z'
DIN 5480 W85 x 3 x 27 x 7h

3-3 HPC200 (cont)

'T' Shaft

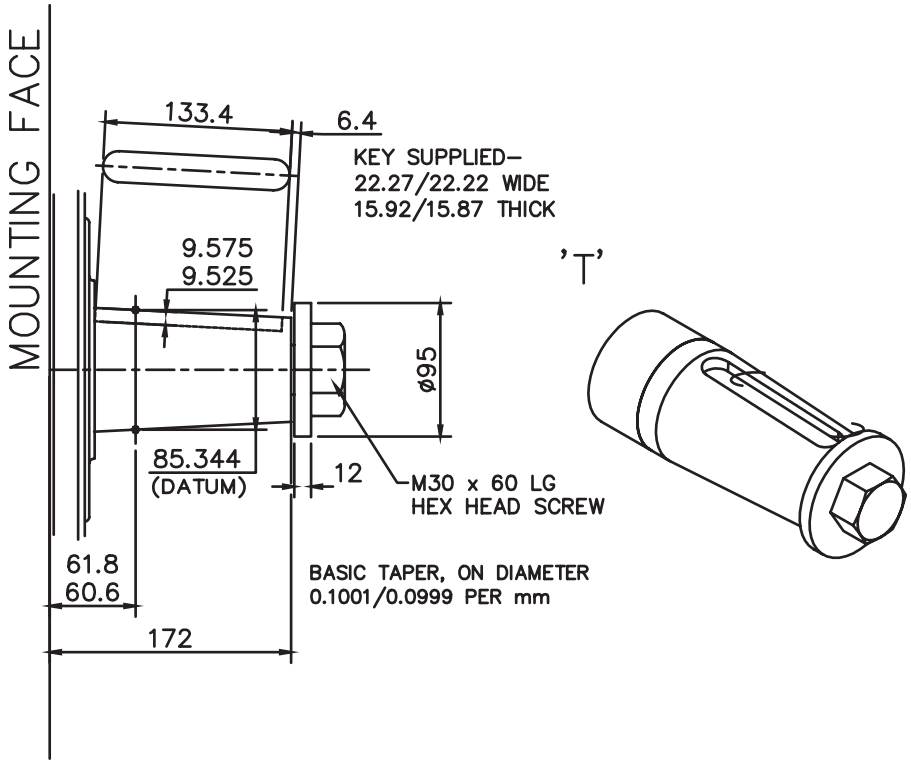

3-3 HPC200 (cont)

'F3' & 'FM3' Valve Housings

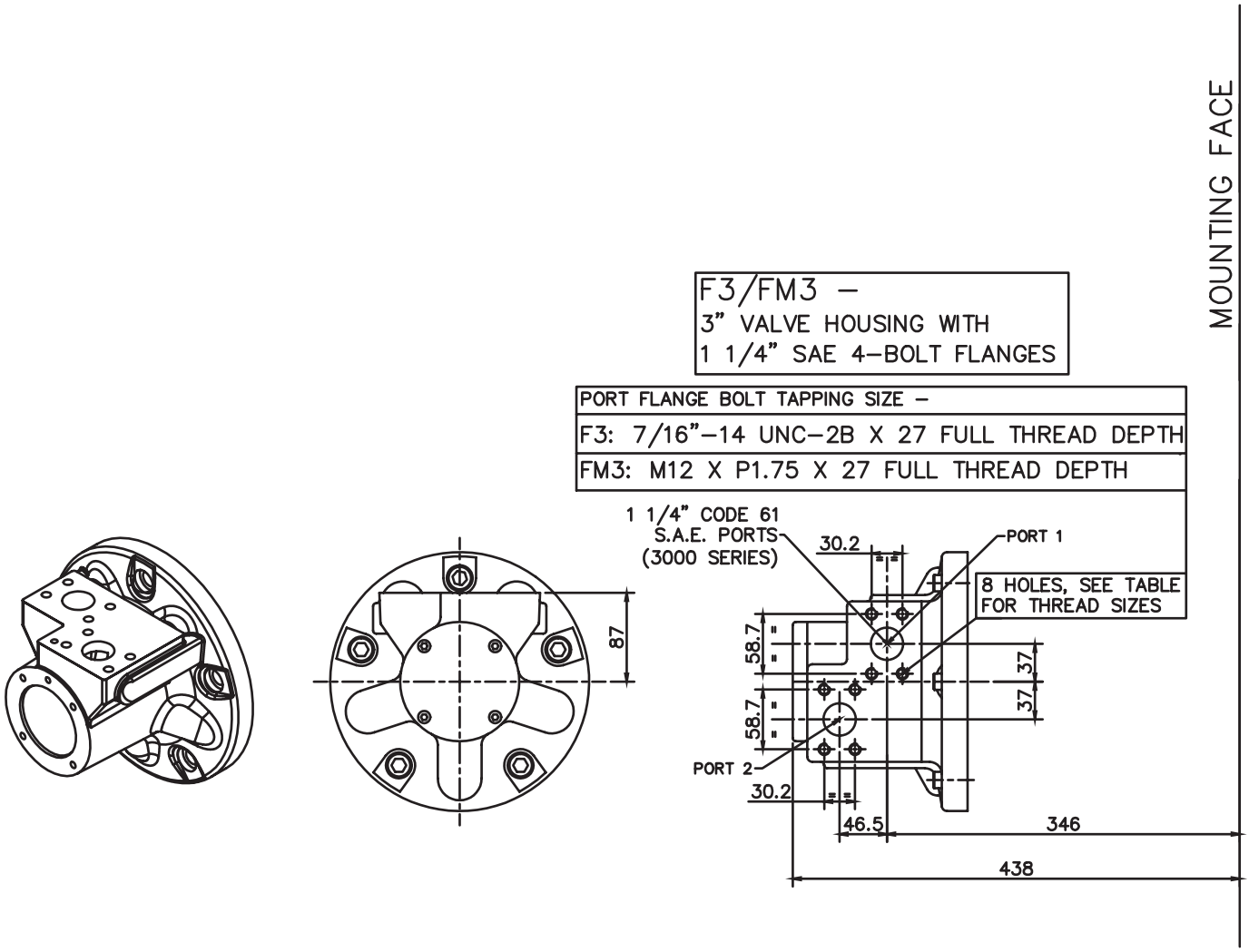

3-3 HPC200 (cont)

'F4' & 'FM4' Valve Housings

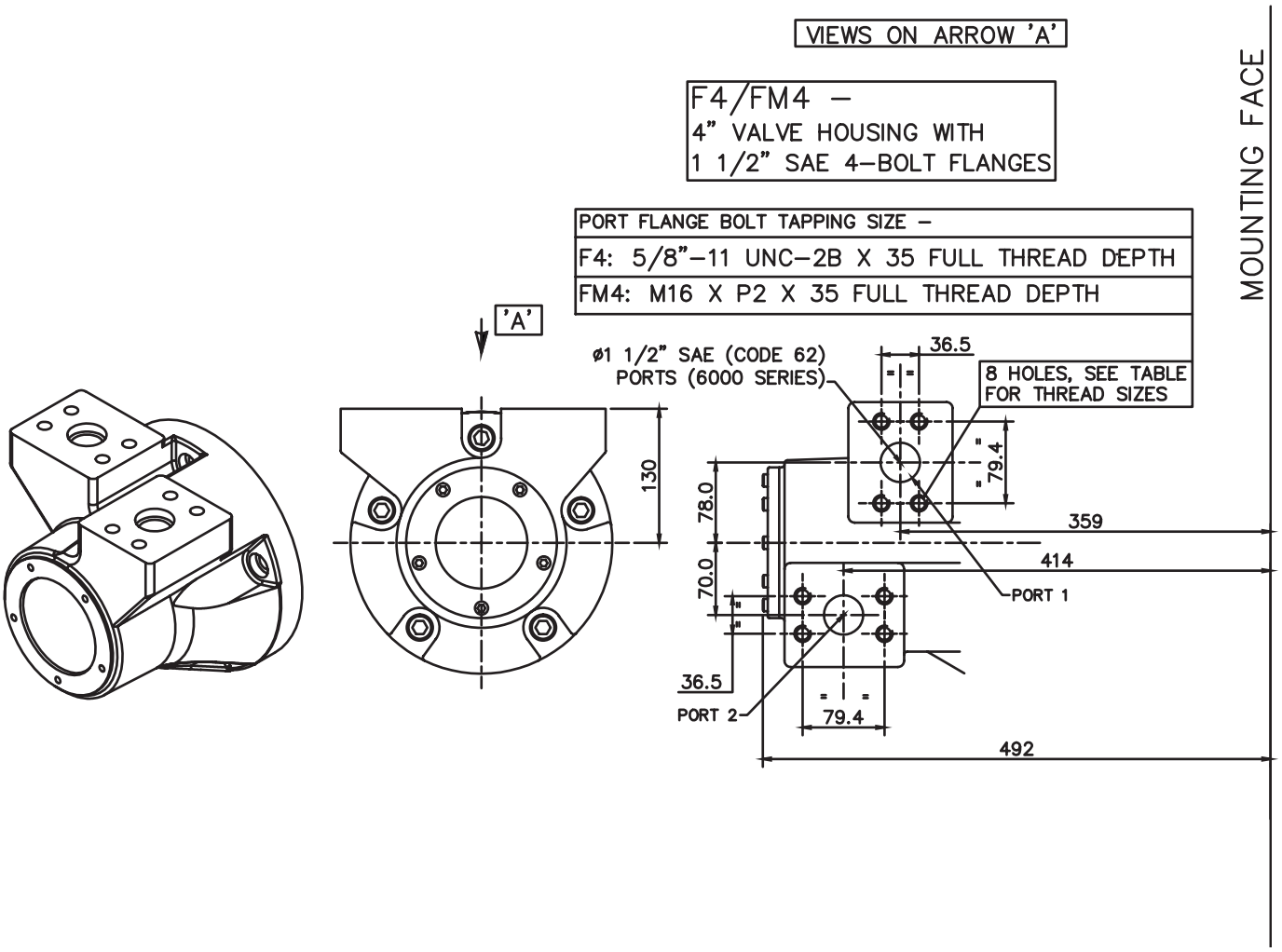

3-3 HPC200 (cont)

'C', 'CS' & 'X' C Spacers

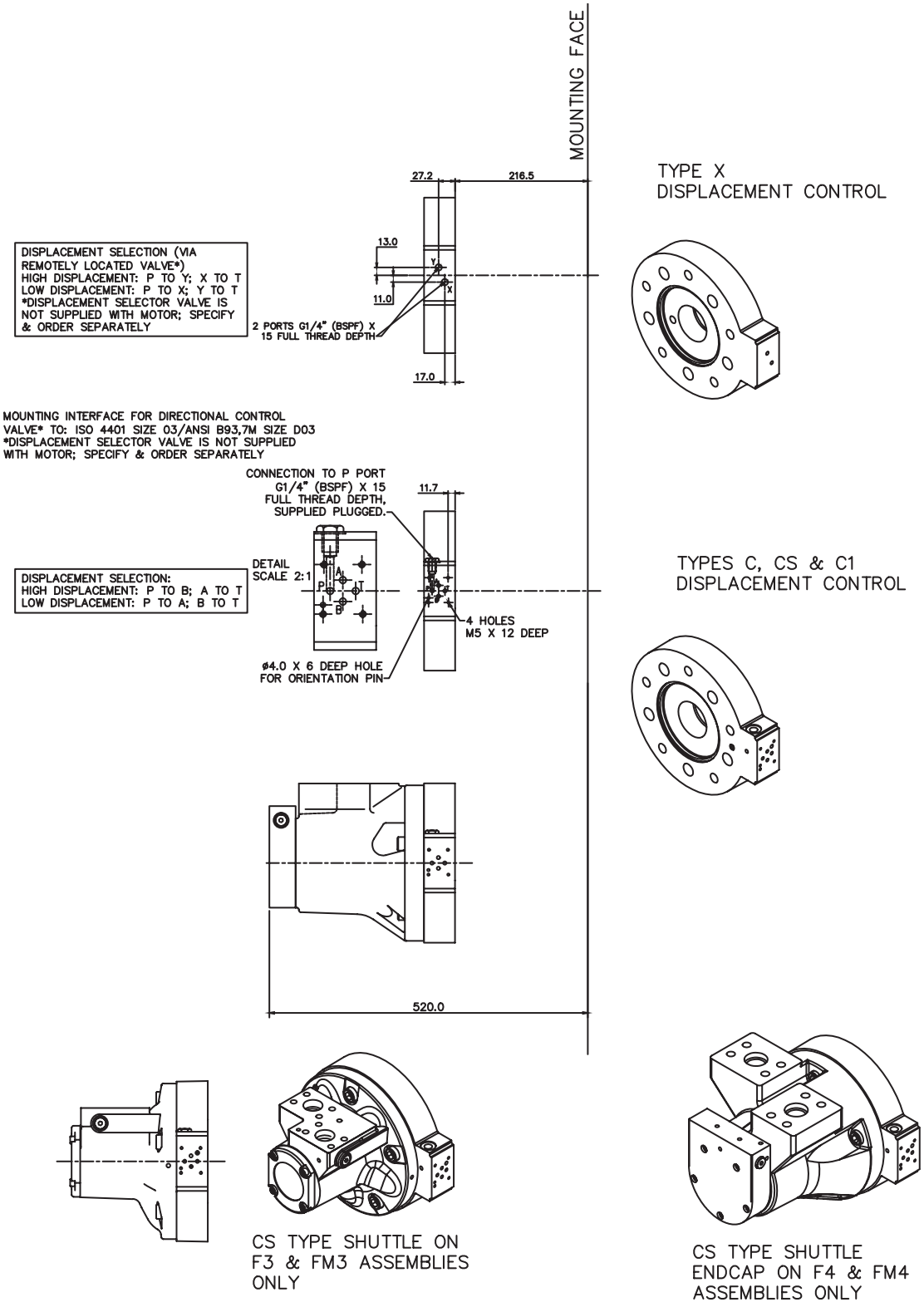

3-3 HPC200 (cont)

Installation

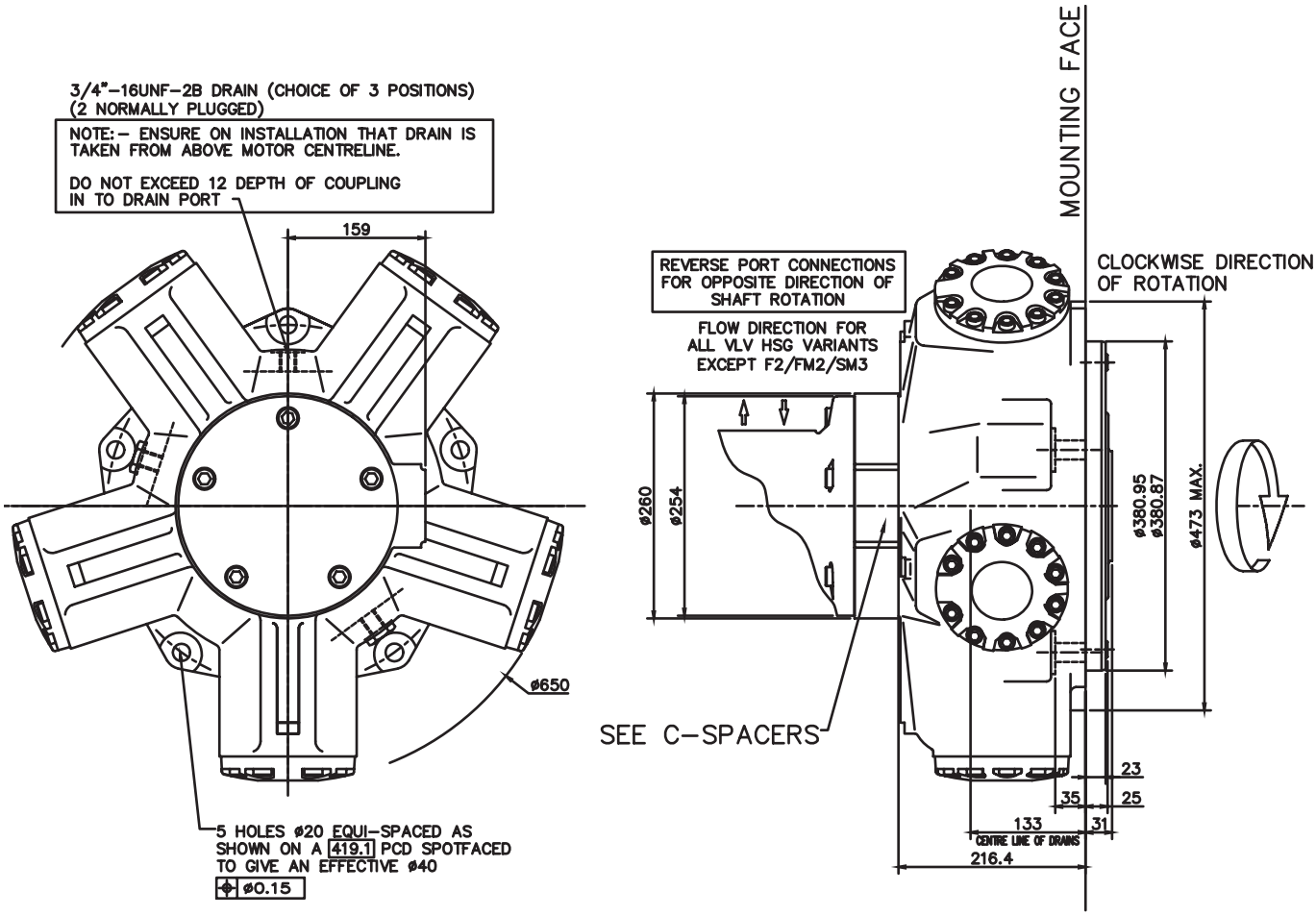

3-4 HPC270

'P1', 'S3' & 'Z4' Shafts

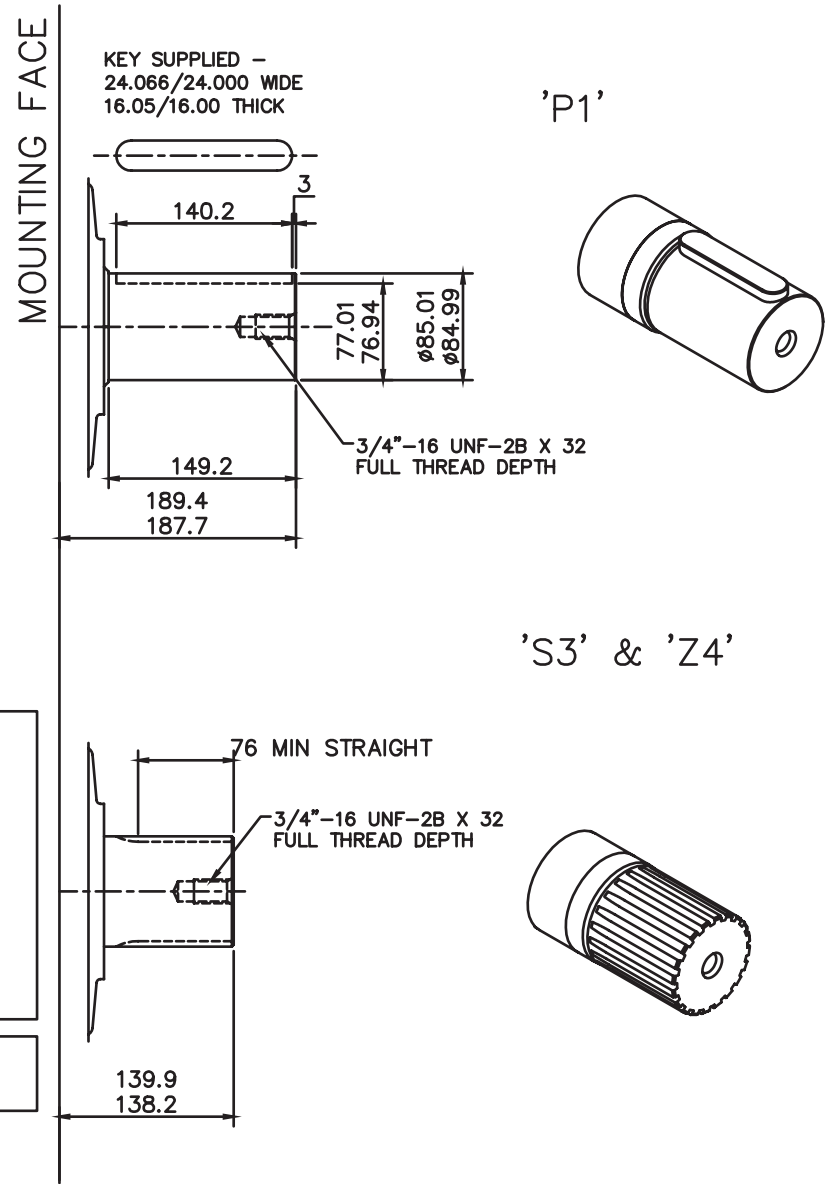

SPLINE DATA

'S'	
TO BS 3550 (ANSI B92.1, CLASS 5)	
FLAT ROOT SIDE FIT, CLASS 1	
PRESSURE ANGLE	30°
NUMBER OF TEETH	20
PITCH	6/12
MAJOR DIAMETER	87.953/87.825
FORM DIAMETER	80.264
MINOR DIAMETER	79.485/78.925
PIN DIAMETER	8.128
DIAMETER OVER PINS	97.084/97.030

'Z'
DIN 5480 W90 x 4 x 21 x 7h

3-4 HPC270 (cont)

'T' Shaft

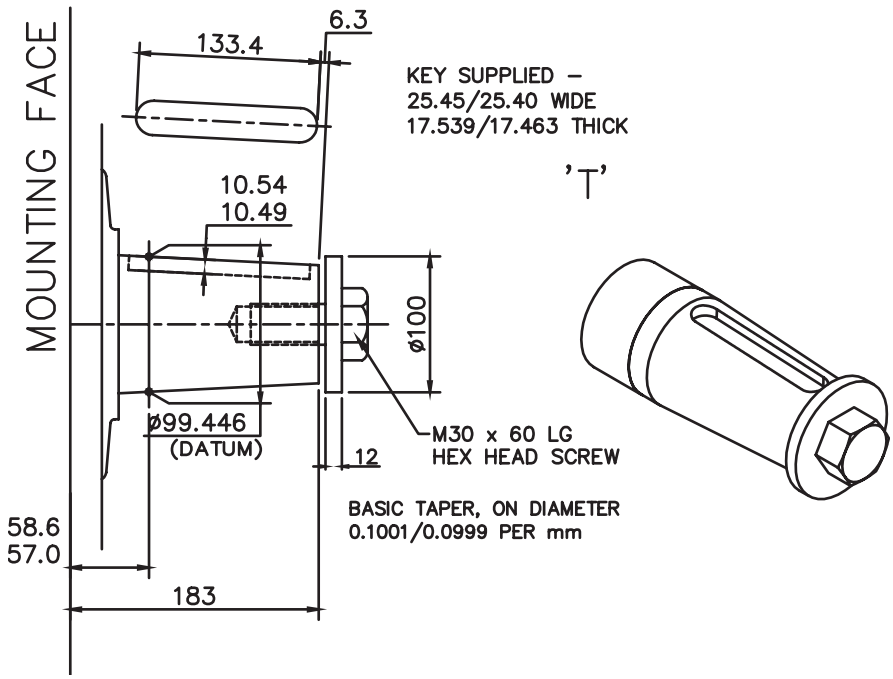

3-4 HPC270 (cont)

'F4' & 'FM4' Valve Housings

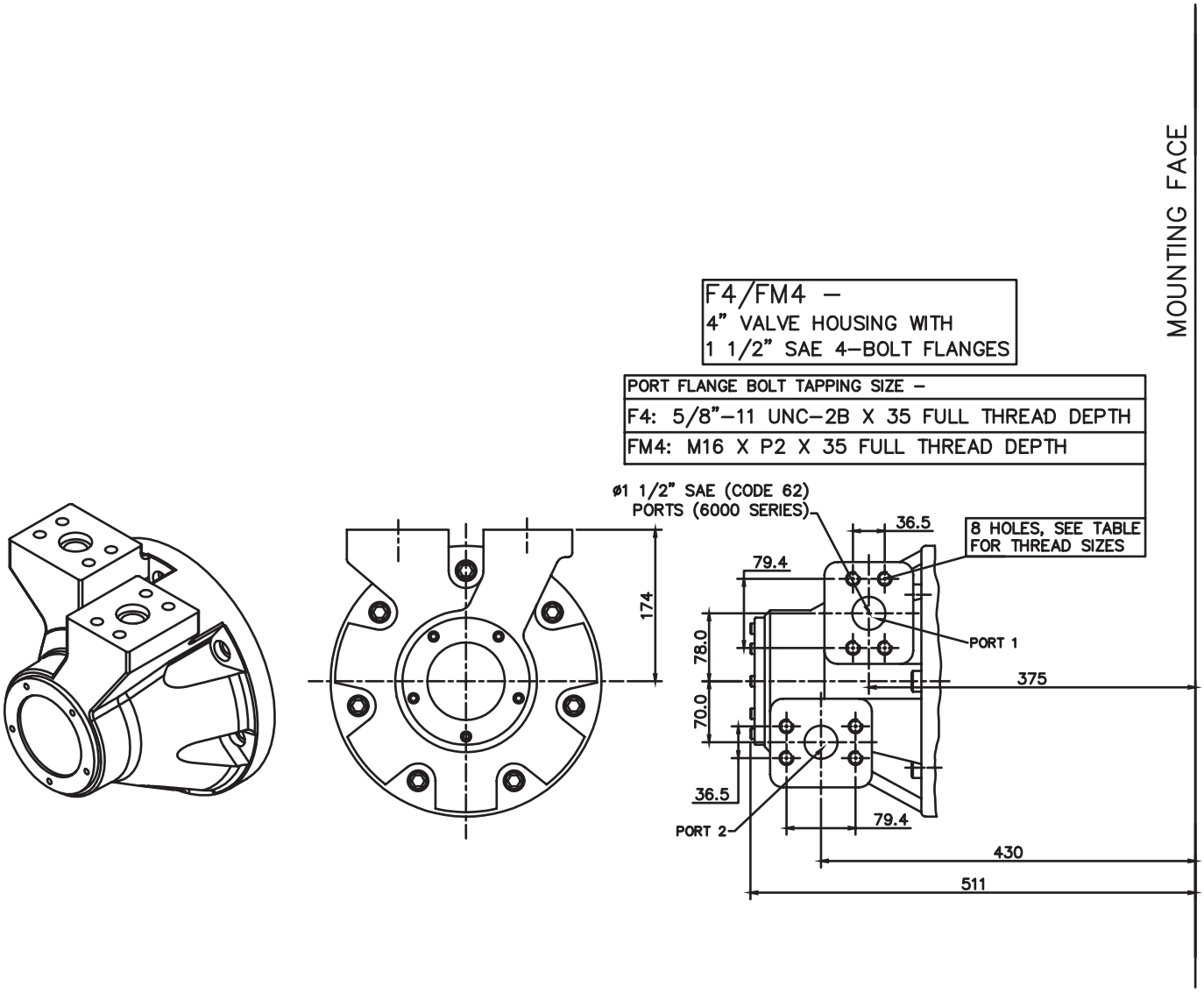

3-4 HPC270 (cont)

'C', 'CS' & 'X' C Spacers

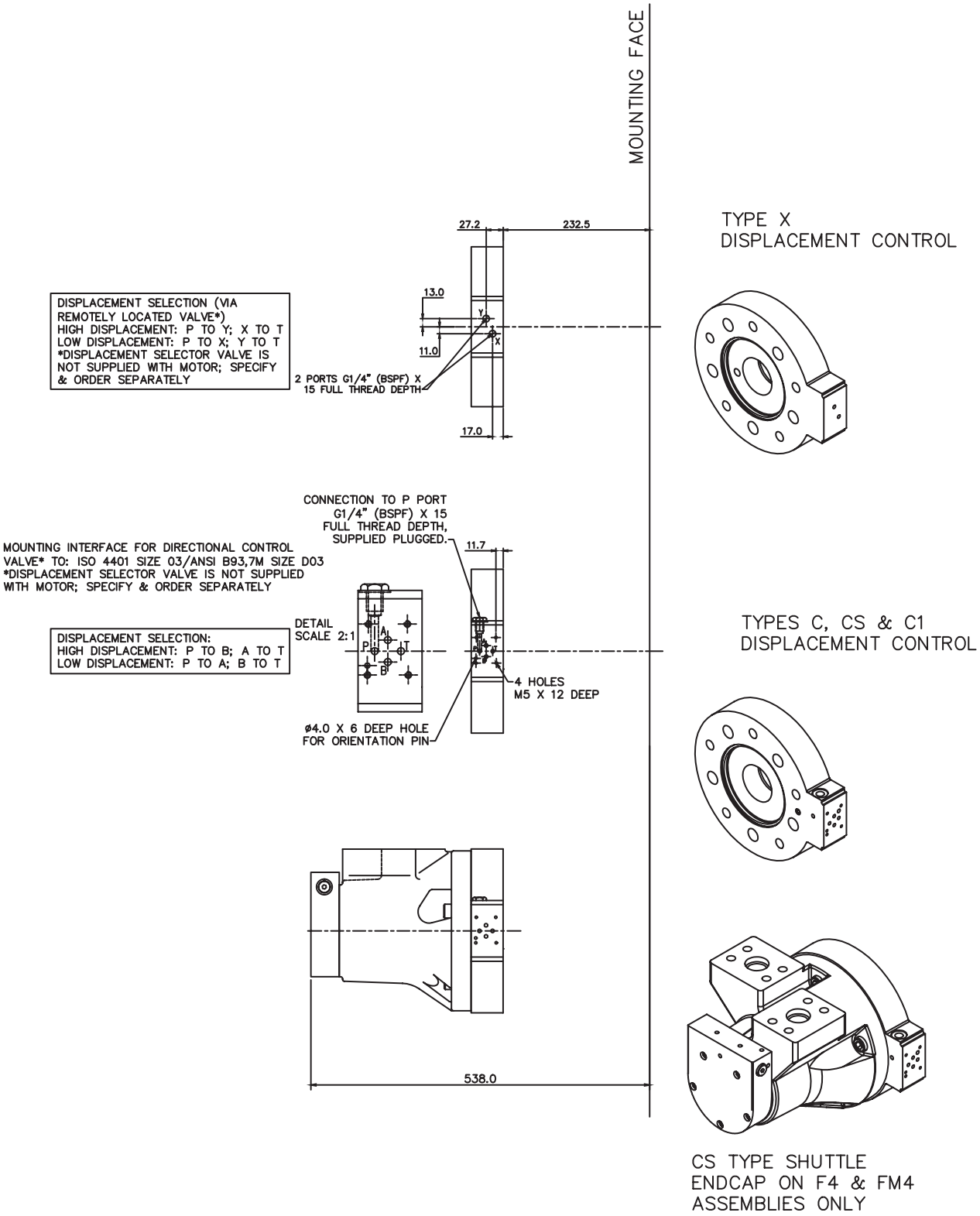

3-4 HPC270 (cont)

Installation

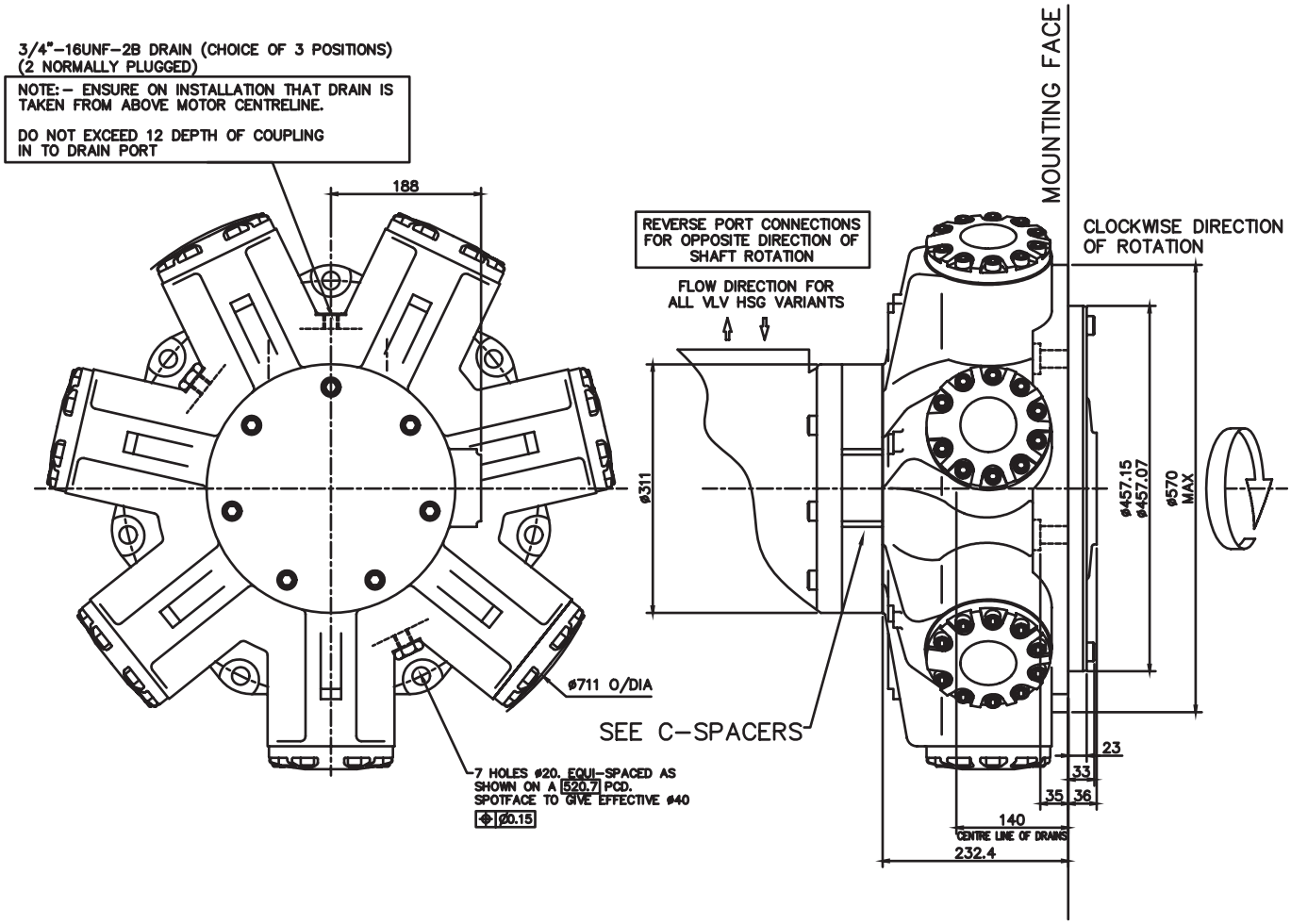

3-5 HPC325

'P1', 'S3' & 'Z4' Shafts

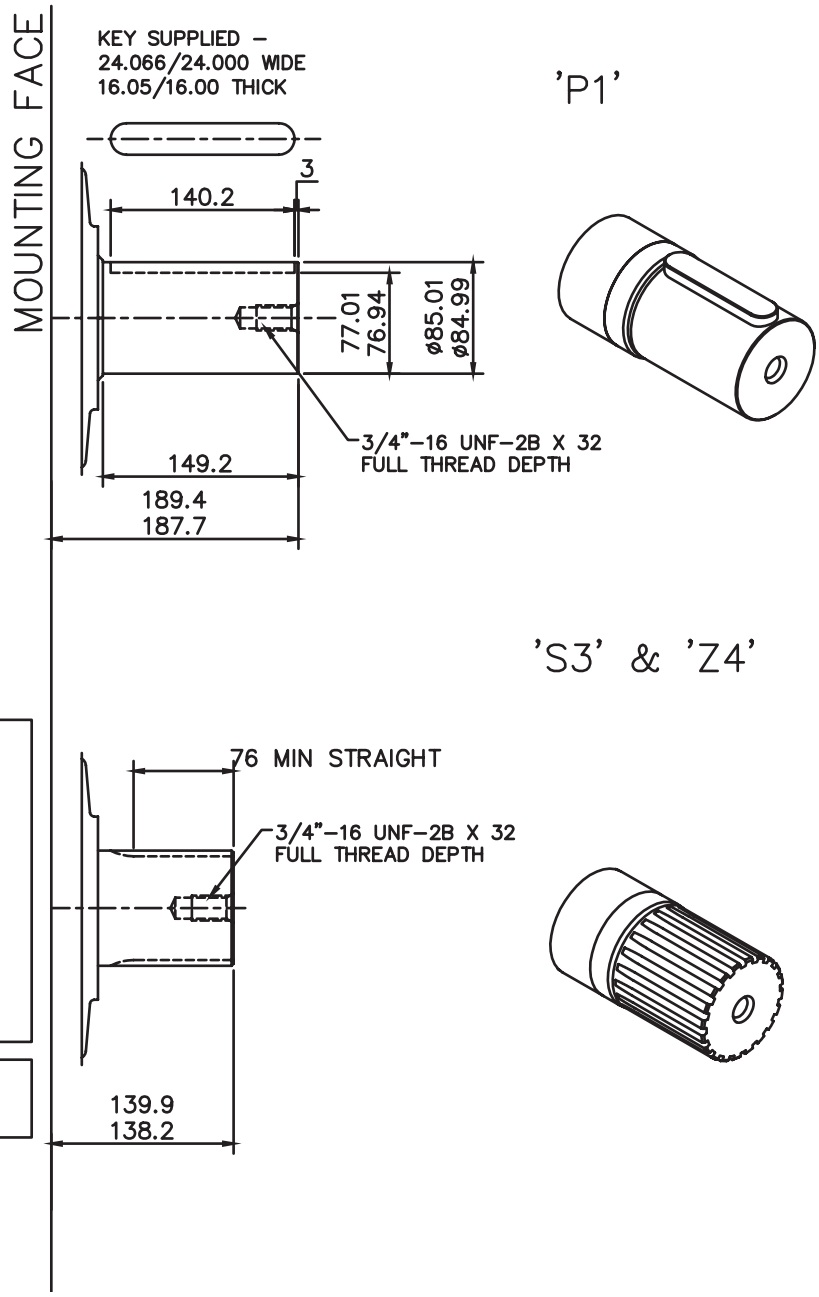

SPLINE DATA

'S'	
TO BS 3550 (ANSI B92.1, CLASS 5)	
FLAT ROOT SIDE FIT, CLASS 1	
PRESSURE ANGLE	30°
NUMBER OF TEETH	20
PITCH	6/12
MAJOR DIAMETER	87.953/87.825
FORM DIAMETER	80.264
MINOR DIAMETER	79.485/78.925
PIN DIAMETER	8.128
DIAMETER OVER PINS	97.084/97.030

'Z'
DIN 5480 W90 x 4 x 21 x 7h

3-5 HPC325 (cont)

'T' Shaft

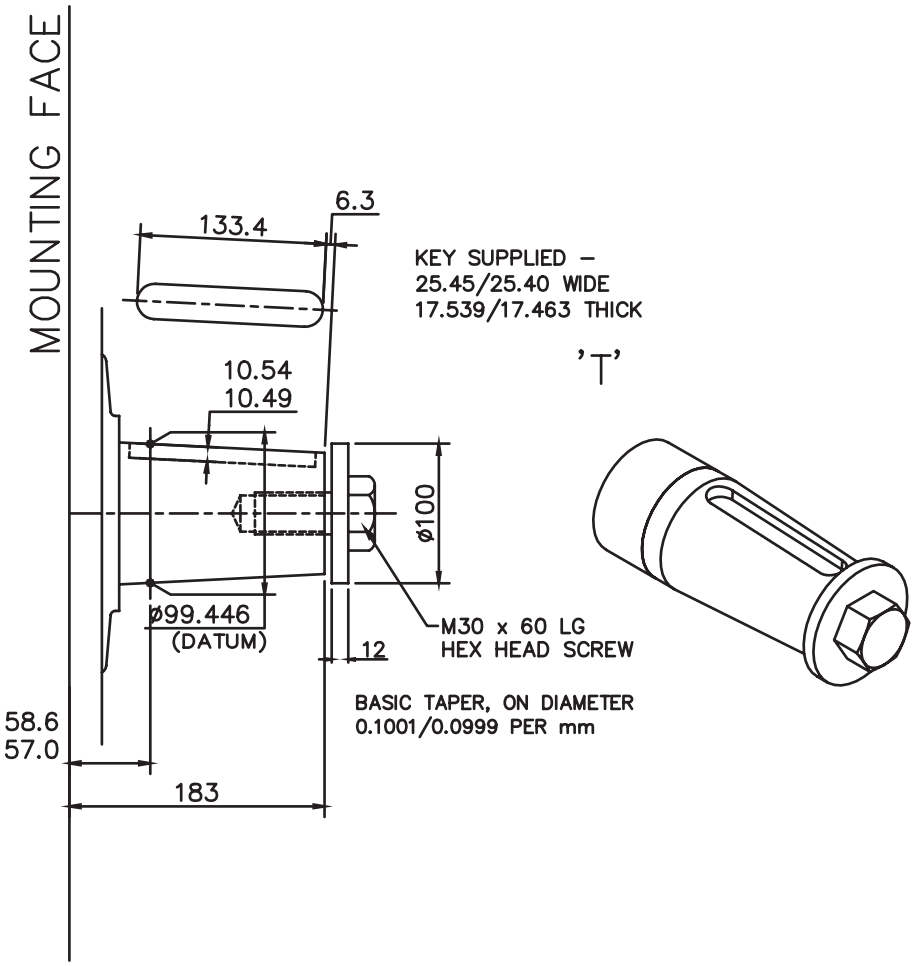

3-5 HPC325 (cont)

'F4' & 'FM4' Valve Housings

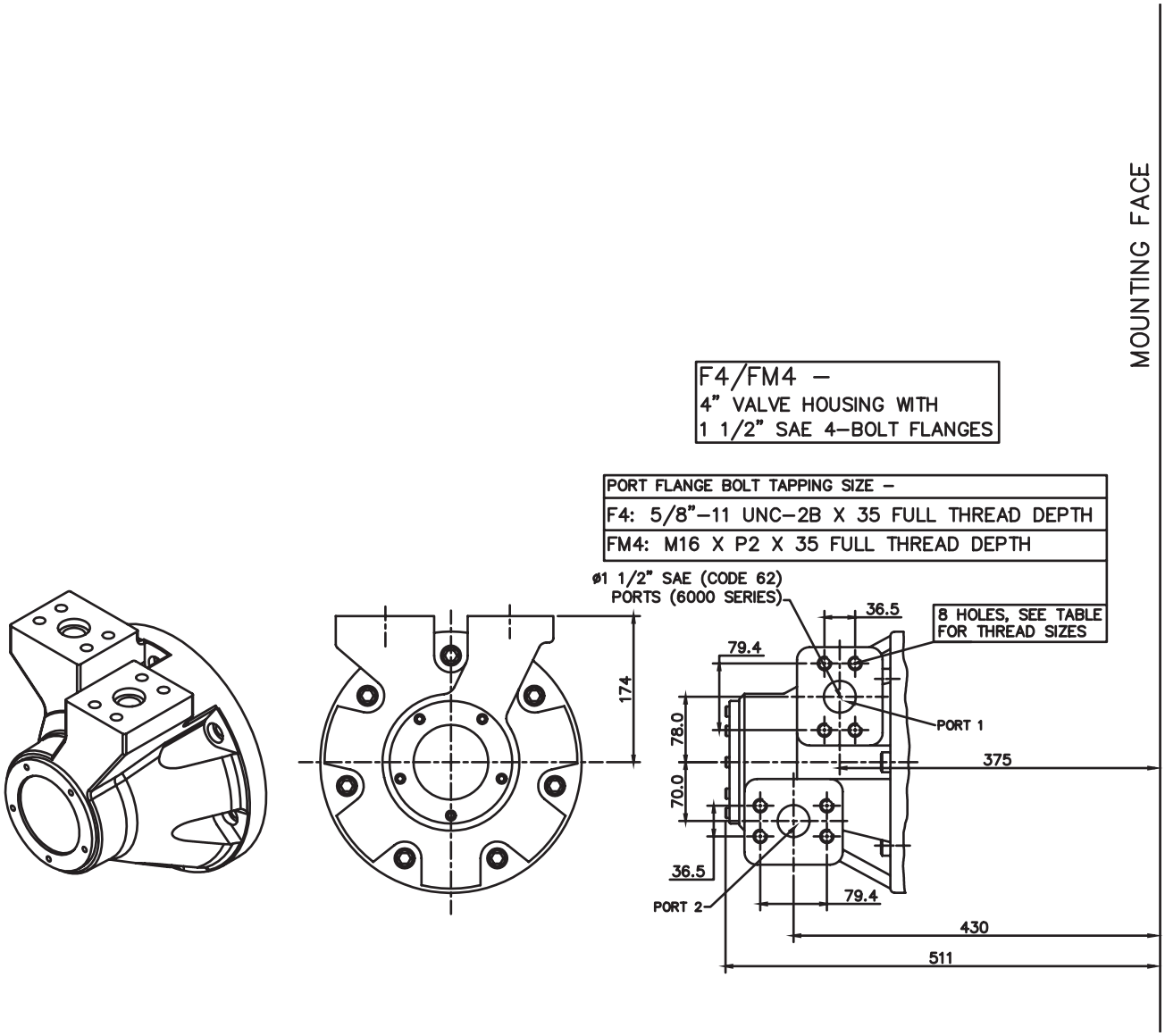

3-5 HPC325 (cont)

'C', 'CS' & 'X' C Spacers

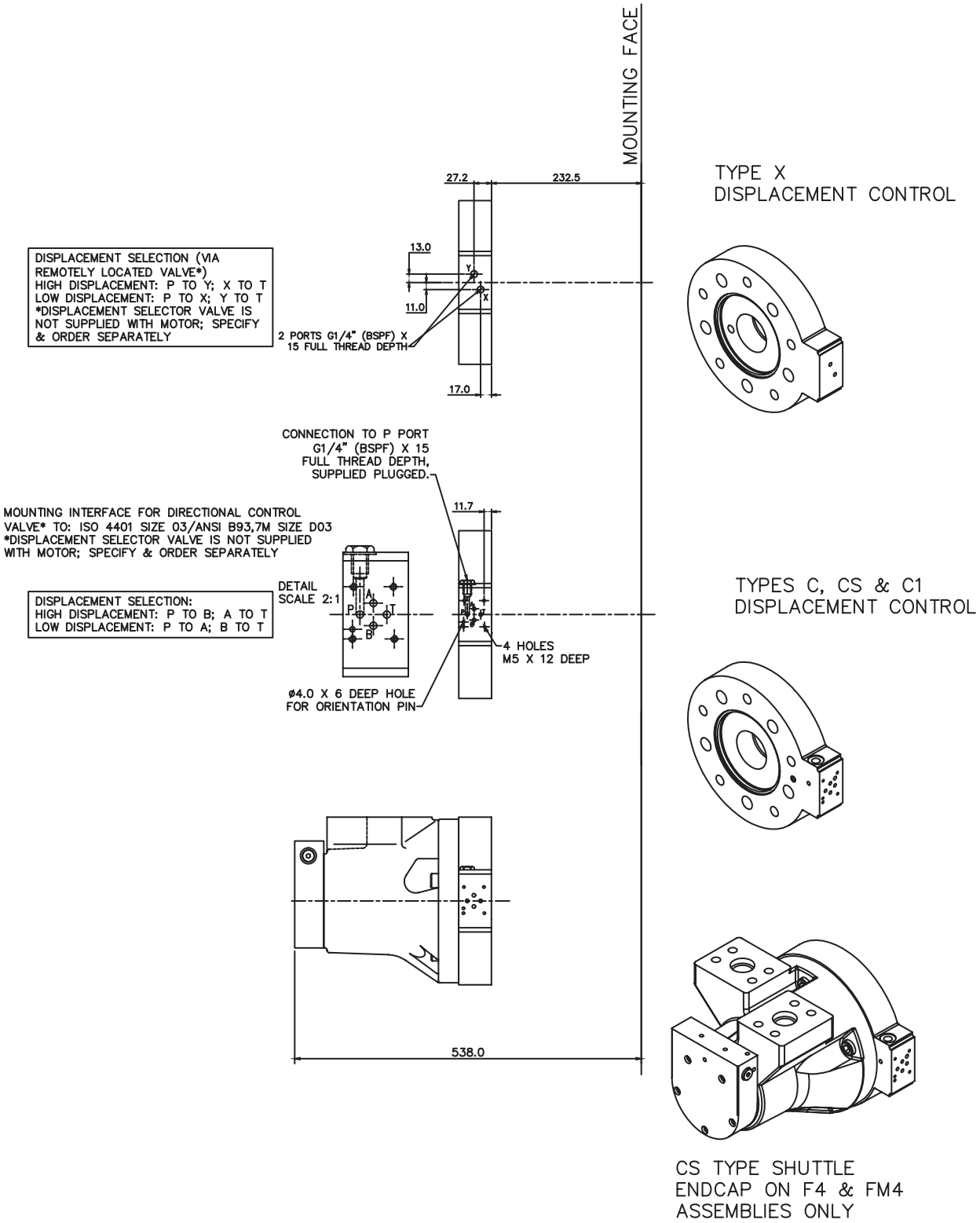

3-5 HPC325 (cont)

Installation

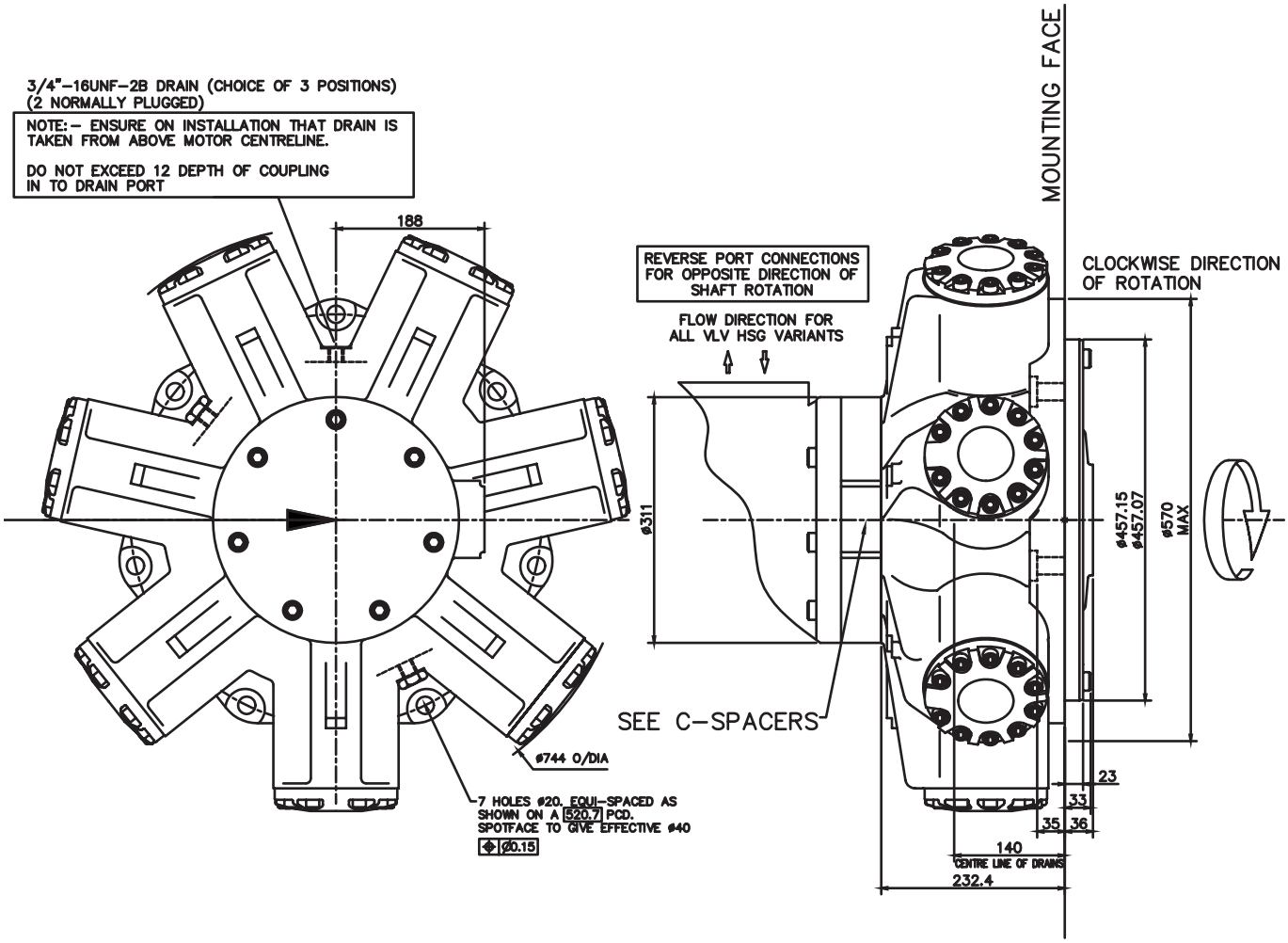

NOTES

NOTES

KAWASAKI PRECISION MACHINERY (UK) LTD
Ernesettle, Plymouth
Devon, PL5 2SA, England

Tel: +44 1752 364394
Fax: +44 1752 364816
Mail: info@kpm-uk.co.uk
Website: www.kpm-eu.com

OTHER GLOBAL SALES OFFICES

JAPAN
Kawasaki Heavy Industry Ltd, Precision Machinery Ltd. Tokyo Office World Trade Center Bidg.
4-1 Hamamatsu-cho
2-chome, Minato-ku
Tokyo 105-6116
Japan
Tel: +81-3-3435-6862
Website: www.khi.co.jp/kpm

U.S.A
Kawasaki Precision Machinery (U.S.A.), Inc.
3838 Broadmoor Avenue S.E.
Grand Rapids
Michigan 49512
U.S.A.
Tel: +1-616-975-3101
Website: www.kpm-usa.com

CHINA
Kawasaki Precision Machinery Trading (Shanghai) Co., Ltd. 17th Floor (Room 1701), The Headquarters Building No168 XiZang Road (M)
Huangpu District
Shanghai 200001
China
Tel: +86-021-3366-3800

The specified data is for product description purposes only and may not be deemed to be guaranteed unless expressly confirmed in the contract.

Data sheet: M-2005/03.17