? ?

OPERATING SPECIFICATIONS

???????? MAX.DISPLACEMENT	cm^3	280 X 2 = 560
? ? ? ? ? RATED SPEED	min^{-1}	1200 (??? ?????? CLOCKWISE VIEWED FROM SHAFT END)
? ? PRESSURE	MPa	31.4
? ? ? ? MAX. FLOW RATE	l/min	336 X 2 = 672
? ? ? ? ? PUMP MODEL NAME		K3VG280DT-10?RS-4000-?

????? ?????????

(1) ????????????????
(2) ?????????????????????(???????)
(3) ???????D,???
(4) ?????????????????????? 0.2 MPa ???
???? 0.59 MPa ??
??????????
(5) ?????????????????????????????(??????????)?
(6) ?????????????? -0.01MPa??
(????????????)???????
(7) ?????????????????????????
(8) ???????? ????????NAS9??????????????????????
(9) ?????????????150????(100μm)??????????-????????
(10) ?????????????10μm?????????????????
(11) ?????? : -20~80℃

NOTES ON MOUNTING AND OPERATION

(1) THE PUMP SHOULD BE MOUNTED WITH THE SHAFT DIRECTED HORIZONTAL.
(2) THE PUMP SHAFT AND FLANGE SURFACES SHOULD BE CLEANED. (FOR REMOVING AN ANTI-RUST MATERIAL)
(3) THE DRAIN PIPING SHOULD BE SO CONNECTED D_1 PORT AS TO KEEP THE CASING FILLED WITH OIL.
(4) KEEP THE CASING PRESSURE BELOW 0.2 MPa NORMALLY ,AND BELOW 0.59 MPa AT ITS PEAK.
(5) BE CAREFUL SO THAT THE DRAIN PIPING LED INTO THE OILTANK IS KEPT BELOW THE SURFACE OF THE OILCO PREVENT AIRATION).
(6) BE CAREFUL SO THAT THE SUCTION PRESSURE IN THE SUCTION FLANGE IS KEPT ABOVE -0.01MPa NORMALLY.
(7) MINERAL ANTIWEAR TYPE HYDRAULIC OIL SHOULD BE USED.
(8) FOR SATISFACTORY SERVICE LIFE OF THE PUMP IN APPLICATION,THE OPERATING FLUID SHOULD BE CONTINUOUSLY FILTERED TO A MINIMUM CLEANLINESS LEVEL OF NAS1638 CLASS 9.
(9) PROVIDE A 150 MESH (100μm) STRAINER IN THE SUCTION LINE.
(10) INSTALL A 10μm FILTER IN THE RETURN LINE.
(11) ALLOWABLE OIL TEMPERATURE RANGE : -20~80℃

	?-?? PORT NAME	?-???? PORT SIZE	?????? ON DELIVERY	?????? N·m TIGHTENING TORQUE
A_1, A_{1S2}	? ? ? - ? DELIVERY PORT	SAE6000psi 1-1/2 ?	?-???? COVERED WITH TAPE	
B	? ? ? - ? SUCTION PORT	SAE 500psi 4 ?	?-???? COVERED WITH TAPE	
D_1	? ? ? ? - ? DRAIN PORT	G 3/4-20	?????????? ATTACHED WITH A VINYL PLUG	167 7 10
$a_{1,2}$,b	? - ? ? - ? GAUGE PORT	G 1/4-15	??????? ATTACHED WITH A STEEL PLUG	36 7 2
P_c	? ? ? ? ? - ? CONTROL PRESS. PORT	R 1/4-12.5	??????? ATTACHED WITH A STEEL PLUG	22 7 2

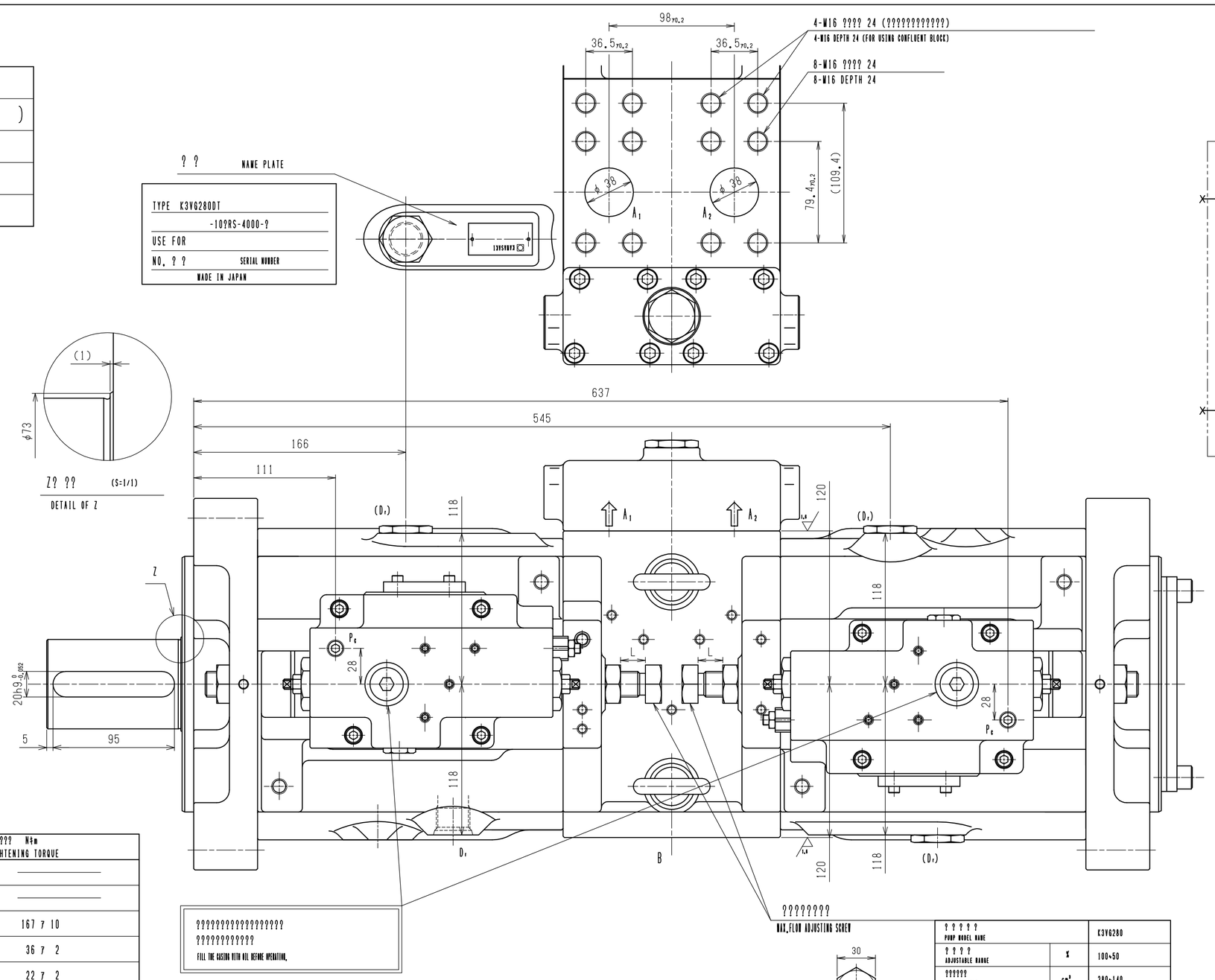

? ? ? ? ? PUMP MODEL NAME		K3VG280
? ? ? ? ADJUSTABLE RANGE	%	100~50
?????? DISPLACEMENT	cm^3	280~140
L	mm	17.2±0.0

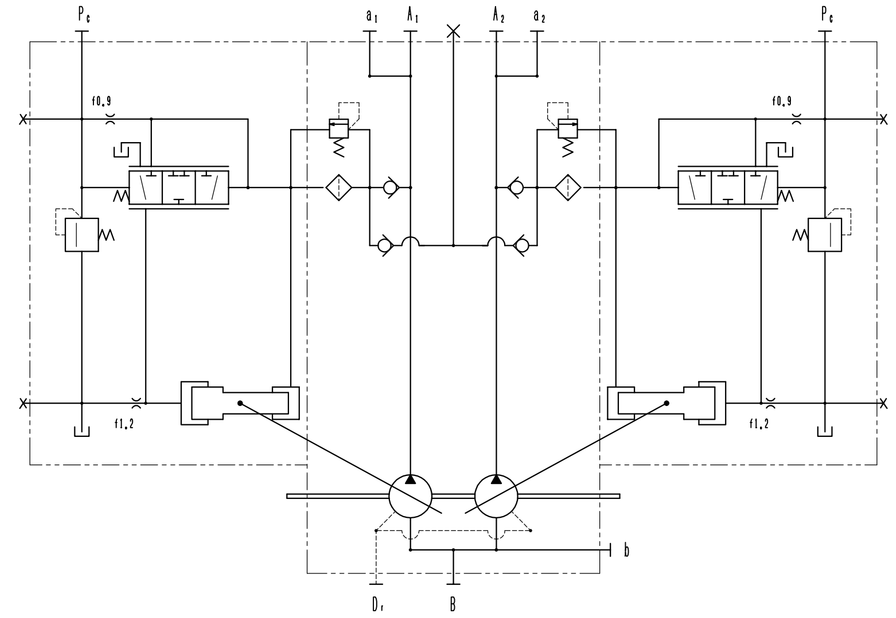

? ? ? ? ?
HYDRAULIC CIRCUIT

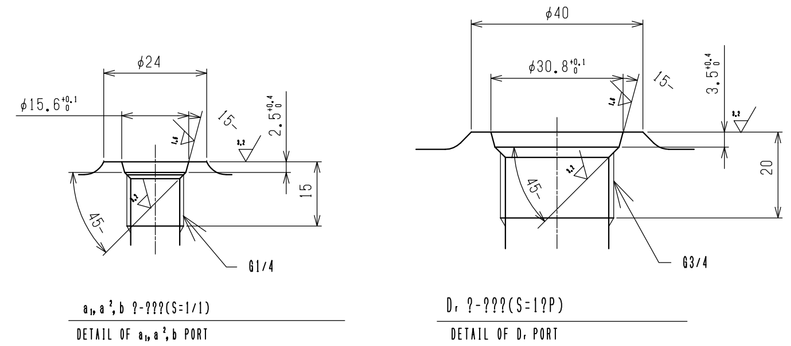

$a_{1,2}$,a^2,b ?-???(S=1/1)
DETAIL OF $a_{1,2}$,a^2,b PORT

D_1 ?-???(S=1?P)
DETAIL OF D_1 PORT

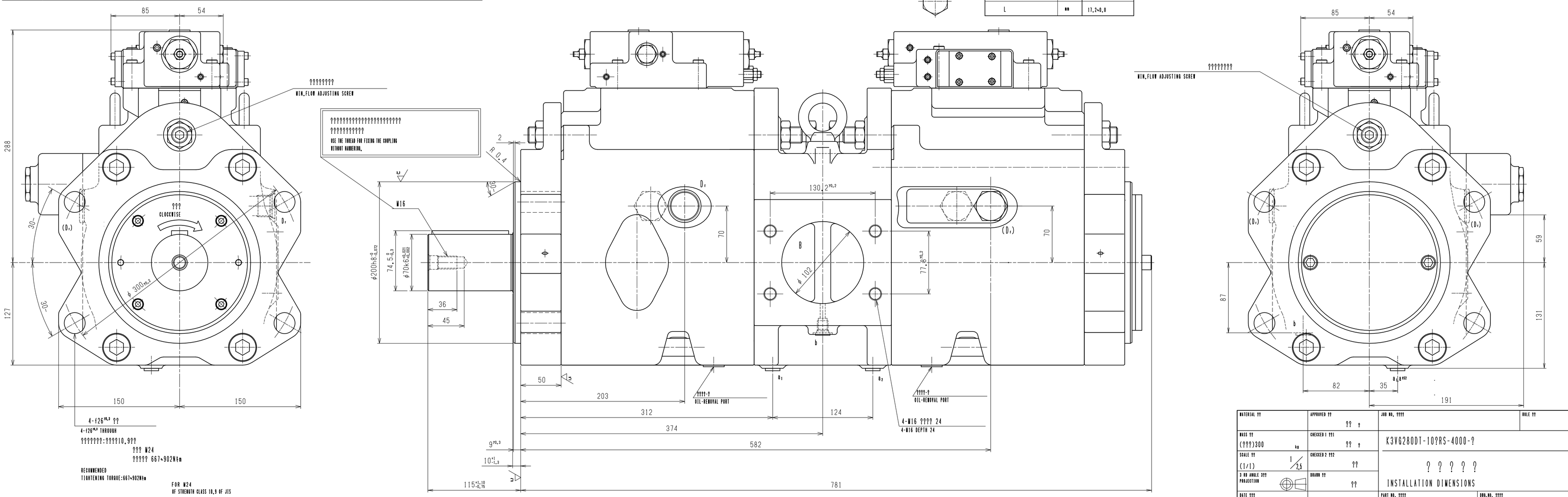

MATERIAL ??	APPROVED ?? ?? ?	JOB NO. ????	SCALE ??
MASS ?? (???)300 kg	CHECKED 1 ??? ?? ?	K3VG280DT-10?RS-4000-?	
SCALE ?? (1/1) 1/2.5	CHECKED 2 ??? ??	? ? ? ? ?	
3 RD ANGLE ??? PROJECTION	DRAWN ?? ??	INSTALLATION DIMENSIONS	
DATE ??? 2000.01.07		PART NO. ????	DWG.NO. ???? 02430-2100

PRECISION MACH.DIV. KAWASAKI HEAVY IND.LTD

2 ? ? ? (A 1)